duma rent
www.duma-rent.com

MANITOU

MANITOU BF
BP 10249
44158 ANCENIS CEDEX - FRANCE
TEL: + 33 (0)2 40 09 10 11

YOUR DEALER

647026 EN (11/03/2011)

MT 1440 A E3
MT 1840 A E3

OPERATOR'S MANUAL
(ORIGINAL INSTRUCTIONS)

THIS OPERATOR'S MANUAL MUST BE KEPT IN THE LIFT TRUCK AND MUST BE READ AND UNDERSTOOD BY OPERATORS.

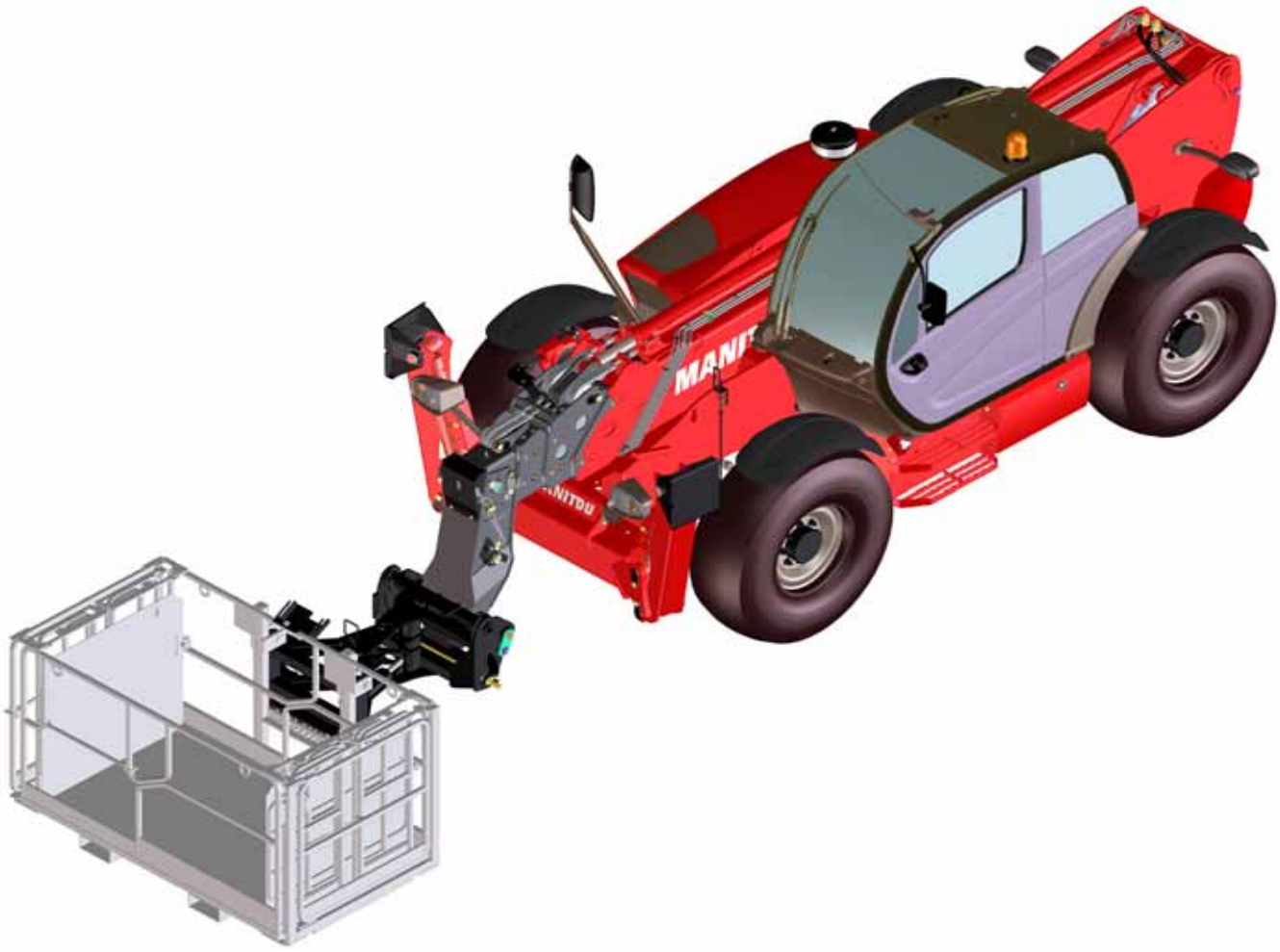

1 - OPERATING AND SAFETY INSTRUCTIONS

2 - DESCRIPTION

3 - MAINTENANCE

4 - ADAPTABLE ATTACHMENTS IN OPTION ON THE RANGE

5 - ADAPTABLE PLATFORMS IN OPTION ON THE RANGE

11/03/2011	1ST DATE OF ISSUE

THE TEXTS AND ILLUSTRATIONS IN THIS DOCUMENT MUST NOT BE REPRODUCED EITHER WHOLLY OR IN PART.

1 - OPERATING AND SAFETY INSTRUCTIONS

TABLE OF CONTENTS

INSTRUCTIONS TO THE COMPANY MANAGER 1 - 4

THE SITE **1 - 4**
THE OPERATOR **1 - 4**
THE LIFT TRUCK **1 - 4**
A - THE LIFT TRUCK'S SUITABILITY FOR THE JOB 1 - 4
B - ADAPTATION OF THE LIFT TRUCK TO STANDARD ENVIRONMENTAL CONDITIONS 1 - 4
C - MODIFICATION OF THE LIFT TRUCK 1 - 5
D - FRENCH ROAD TRAFFIC RULES (or see current legislation in other countries) 1 - 5
THE INSTRUCTIONS **1 - 5**
THE MAINTENANCE **1 - 5**

INSTRUCTIONS FOR THE OPERATOR 1 - 6

PREAMBULE **1 - 6**
GENERAL INSTRUCTIONS **1 - 6**
A - OPERATOR'S MANUAL 1 - 6
B - AUTHORIZATION FOR USE IN FRANCE (or see current legislation in other countries) 1 - 6
C - MAINTENANCE 1 - 6
D - MODIFICATION OF THE LIFT TRUCK 1 - 6
E - LIFTING PEOPLE 1 - 7
OPERATING INSTRUCTIONS UNLADEN AND LADEN **1 - 8**
A - BEFORE STARTING THE LIFT TRUCK 1 - 8
B - DRIVER'S OPERATING INSTRUCTIONS 1 - 8
C - ENVIRONMENT 1 - 9
D - VISIBILITY 1 - 9
E - STARTING THE LIFT TRUCK 1 - 10
F - DRIVING THE LIFT TRUCK 1 - 10
G - STOPPING THE LIFT TRUCK 1 - 11
H - DRIVING THE LIFT TRUCK ON THE PUBLIC HIGHWAY (or see current legislation in other countries) 1 - 12
INSTRUCTIONS FOR HANDLING A LOAD **1 - 14**
A - CHOICE OF ATTACHMENTS 1 - 14
B - MASS OF LOAD AND CENTRE OF GRAVITY 1 - 14
C - LONGITUDINAL STABILITY LIMITER AND WARNING DEVICE 1 - 14
D - TRANSVERSE ATTITUDE OF THE LIFT TRUCK 1 - 15
E - TAKING UP A LOAD ON THE GROUND 1 - 15
F - TAKING UP AND LAYING A HIGH LOAD ON TYRES 1 - 16
G - TAKING UP AND LAYING A HIGH LOAD ON STABILIZERS 1 - 18
H - TAKING UP AND LAYING DOWN A SUSPENDED LOAD 1 - 20
I - TRAVELLING WITH A SUSPENDED LOAD 1 - 20
PLATFORM OPERATING INSTRUCTIONS **1 - 21**
A - AUTHORISATION FOR USE 1 - 21
B - SUITABILITY OF THE PLATFORM FOR THE JOB 1 - 21
C - PRECAUTIONS WHEN USING THE PLATFORM 1 - 21
D - USING THE PLATFORM 1 - 21
E - ENVIRONMENT 1 - 21
F - MAINTENANCE 1 - 22
INSTRUCTIONS FOR USING THE RADIO-CONTROL **1 - 23**

MAINTENANCE INSTRUCTIONS OF THE LIFT TRUCK 1 - 24

GENERAL INSTRUCTIONS **1 - 24**
MAINTENANCE **1 - 24**
LUBRICANT AND FUEL LEVELS **1 - 24**
HYDRAULIC **1 - 24**
ELECTRICITY **1 - 24**
WELDING **1 - 25**
WASHING THE LIFT TRUCK **1 - 25**

IF THE LIFT TRUCK IS NOT TO BE USED FOR A LONG TIME 1 - 26

INTRODUCTION **1 - 26**
PREPARING THE LIFT TRUCK **1 - 26**
PROTECTING THE I.C. ENGINE **1 - 26**
PROTECTING THE LIFT TRUCK **1 - 26**
BRINGING THE LIFT TRUCK BACK INTO SERVICE **1 - 27**

INSTRUCTIONS TO THE COMPANY MANAGER

THE SITE

- Proper management of lift truck's area of travel will reduce the risk of accidents:
  . ground not unnecessarily uneven or obstructed,
  . no excessive slopes,
  . pedestrian traffic controlled, etc.

THE OPERATOR

- Only qualified, authorized personnel can use the lift truck. This authorization is given in writing by the appropriate person in the establishment with respect to the use of lift trucks and must be carried permanently by the operator.

On the basis of experience, there are a number of possible situations in which operating the lift truck is contra-indicated. Such foreseeable abnormal uses, the main ones being listed below, are strictly forbidden.

- The foreseeable abnormal behaviour resulting from ordinary neglect, but does not result from any wish to put the machinery to any improper use.
- The reflex reactions of a person in the event of a malfunction, incident, fault, etc. during operation of the lift truck.
- Behaviour resulting from application of the «principle of least action» when performing a task.
- For certain machines, the foreseeable behaviour of such persons as: apprentices, teenagers, handicapped persons, trainees tempted to drive a lift truck, operator tempted to operate a truck to win a bet, in competition or for their own personal experience.
The person in charge of the equipment must take these criteria into account when assessing whether or not a person will makea suitable driver.

THE LIFT TRUCK

A - THE TRUCK'S SUITABILITY FOR THE JOB

- MANITOU has ensured that this lift truck is suitable for use under the standard operating conditions defined in this operator's manual, with a **STATIC** test coefficient **OF 1.33** and a **DYNAMIC** test coefficient **OF 1**, as specified in harmonized norm **EN 1459** for variable range trucks.
- Before commissioning, the company manager must make sure that the lift truck is appropriate for the work to be done, and perform certain tests (in accordance with current legislation).

B - ADAPTATION OF THE LIFT TRUCK TO STANDARD ENVIRONMENTAL CONDITIONS

- In addition to series equipment mounted on your lift truck, many options are available, such as: road lighting, stop lights, flashing light, reverse lights, reverse buzzer alarm, front light, rear light, light at the jib head, etc… (as model of lift truck).
- The operator must take into account the operating conditions to define the lift truck's signalling and lighting equipment. Contact your dealer.
- Take into account climatic and atmospheric conditions of the site of utilisation.
  . Protection against frost (see: 3 - MAINTENANCE: LUBRICANTS AND FUEL).
  . Adaptation of lubricants (ask your dealer for information).
  . I.C. engine filtration (see: 3 - MAINTENANCE: FILTERS CARTRIDGES AND BELTS).

For operation under average climatic conditions, i.e.: between - 15 °C and + 35 °C, correct levels of lubricants in all the circuits are checked in production. For operation under more severe climatic conditions, before starting up, it is necessary to drain all the circuits, then ensure correct levels of lubricants using lubricants properly suited to the relevant ambient temperatures. It is the same for the cooling liquid.

- A lift truck operating in an area without fire extinguishing equipment must be equipped with an individual extinguisher. There are solutions, consult your dealer.

Your lift truck is designed for outdoor use under normal atmospheric conditions and indoor use in suitably aerated and ventilated premises. It is prohibited to use the lift truck in areas where there is a risk of fire or which are potentially explosive (e.g. Refineries, fuel or gas depots, stores of inflammable products…). For use in these areas, specific equipment is available (ask your dealer for information).

- Our trucks comply with Directive 2004/108/EC concerning electromagnetic compatibility (EMC), and with the corresponding harmonized norm EN 12895. Their proper operation is no longer guaranteed if they are used within areas in which the electromagnetic fields exceed the limit specified by that norm (10 V/m).
- Directive 2002/44/EC requires company managers to not expose their employees to excessive vibration doses. There is no recognized code of measurement for comparing the machines of different manufacturers. The actual doses received can therefore be measured only under actual operating conditions at the user's premises.
- The following are some tips for minimizing these vibration doses:
  - Select the most suitable lift truck and attachment for the intended use.
  - Adapt the seat adjustment to the operator's weight (according to lift truck model) and maintain it in good condition, as well as the cab suspension. Inflate the tires in accordance with recommendations.
  - Ensure that the operators adapt their operating speed to suit the conditions on site.
  - As far as possible, arrange the site in such a way as to provide a flat running surface and remove obstacles and harmful potholes.

C - MODIFICATION OF THE LIFT TRUCK

- For your safety and that of others, you must not change the structure and settings of the various components used in your lift truck (hydraulic pressure, calibrating limiters, I.C. engine speed, addition of extra equipment, addition of counterweight, unapproved attachments, alarm systems, etc.) yourself. In this event, the manufacturer cannot be held responsible.

D - FRENCH ROAD TRAFFIC RULES

(or see current legislation in other countries)

- Only one certificate of conformity is issued. It must be kept in a safe place.

THE INSTRUCTIONS

- The operator's manual must always be in good condition and kept in the place provided on the lift truck and in the language used by the operator.
- The operator's manual and any plates or stickers which are no longer legible or are damaged, must be replaced immediately.

THE MAINTENANCE

- Maintenance or repairs other than those detailed in part: 3 - MAINTENANCE must be carried out by qualified personnel (consult your dealer) and under the necessary safety conditions to maintain the health of the operator and any third party.

Your lift truck must be inspected periodically to ensure that it remains in compliance. The frequency of this inspection is defined by current legislation in the country in which the lift truck is used.

INSTRUCTIONS FOR THE OPERATOR

PREAMBLE

WHENEVER YOU SEE THIS SYMBOL IT MEANS:

WARNING ! BE CAREFUL ! YOUR SAFETY OR THE SAFETY OF THE LIFT TRUCK IS AT RISK.

The risk of accident while using, servicing or repairing your lift truck can be restricted if you follow the safety instructions and safety measures detailed in these instruction.

- Only the operations and manœuvres described in these operator's manual must be performed. The manufacturer cannot predict all possible risky situations. Consequently, the safety instructions given in the operator's manual and on the lift truck itself are not exhaustive.
- At any time, as an operator, you must envisage, within reason, the possible risk to yourself, to others or to the lift truck itself when you use it.

Failure to respect the safety and operating instructions, or the instructions for repairing or servicing your lift truck may lead to serious, even fatal accident.

GENERAL INSTRUCTIONS

A - OPERATOR'S MANUAL
- Read the operator's manual carefully.
- The operator's manual must always be in good condition and in the place provided for it on the lift truck.
- You must report any plates and stickers which are no longer legible or which are damaged.

B - AUTHORISATION FOR USE IN FRANCE
(or see current legislation in other countries)
- Only qualified, authorized personnel can use the lift truck. This authorization is given in writing by the appropriate person in the establishment with respect to the use of lift trucks and must be carried permanently by the operator.
- The operator is not competent to authorise the driving of the lift truck by another person.

C - MAINTENANCE
- The operator must immediately advise his superior if his lift truck is not in good working order or does not comply with the safety notice.
- The operator is prohibited from carrying out any repairs or adjustments himself, unless he has been trained for this purpose. He must keep the lift truck properly cleaned if this is among his responsibilities.
- The operator must carry out daily maintenance (see: 3 - MAINTENANCE: A - DAILY OR EVERY 10 HOURS SERVICE).
- The operator must ensure tyres are adapted to the nature of the ground (see area of the contact surface of the tyres in the chapter: 2 - DESCRIPTION: FRONT AND REAR TYRES). There are optional solutions, consult your dealer.
  . SAND tyres.
  . LAND tyres.
  . Snow chains.

Do not use the lift truck if the tyres are incorrectly inflated, damaged or excessively worn, because this could put your own safety or that of others at risk, or cause damage to the lift truck itself. The fitting of foam inflated tyres is prohibited and is not guaranteed by the manufacturer, excepting prior authorisation.

D - MODIFICATION OF THE LIFT TRUCK
- For your safety and that of others, you must not change the structure and settings of the various components used in your lift truck (hydraulic pressure, calibrating limiters, I.C. engine speed, addition of extra equipment, addition of counterweight, unapproved attachments, alarm systems, etc.) yourself. In this event, the manufacturer cannot be held responsible.

E - LIFTING PEOPLE

- The use of working equipment and load lifting attachments to lift people is:
  - either forbidden
  - or authorized exceptionally and under certain conditions (see current regulations in the country in which the lift truck is used).
- The pictogram posted at the operator station reminds you that:
  - Left-hand column
    - It is forbidden to lift people, with any kind of attachment, using a non PLATFORM-fitted lift truck.
  - Right-hand column
    - With a PLATFORM-fitted lift truck, people can only be lifted using platforms designed by MANITOU for the purpose.
- MANITOU sells equipment specifically designed for lifting people (OPTION PLATFORM lift truck, contact your dealer).

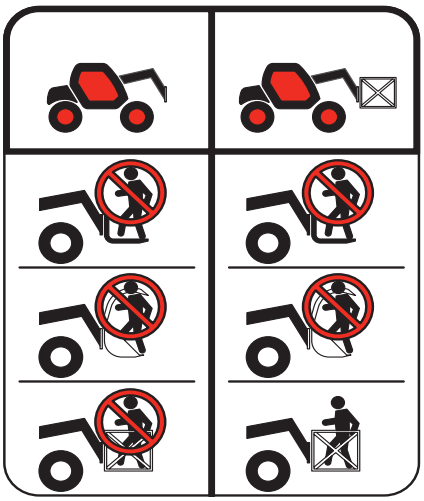

OPERATING INSTRUCTIONS UNLADEN AND LADEN

A - BEFORE STARTING THE LIFT TRUCK

- Carry out daily maintenance (see: 3 - MAINTENANCE: A - DAILY OR EVERY 10 HOURS SERVICE).
- Make sure the lights, indicators and windscreen wipers are working properly.
- Make sure the rear view mirrors are in good condition, clean and properly adjusted.
- Make sure the horn works.

B - DRIVER'S OPERATING INSTRUCTIONS

- Whatever his experience, the operator is advised to familiarize himself with the position and operation of all the controls and instruments before operating the lift truck.
- Wear clothes suited for driving the lift truck, avoid loose clothes.
- Make sure you have the appropriate protective equipment for the job to be done.
- Prolonged exposure to high noise levels may cause hearing problems. It is recommended to wear ear muffs to protect against excessive noise.
- Always face the lift truck when getting into and leaving the driving seat and use the handle(s) provided for this purpose. Do not jump out of the seat to get down.
- Always pay attention when using the lift truck. Do not listen to the radio or music using headphones or earphones.
- Never operate the lift truck when hands or feet are wet or soiled with greasy substances.
- For increased comfort, adjust the seat to your requirements and adopt the correct position in the driver's cab.

Under no circumstances must the seat be adjusted while the lift truck is moving.

- The operator must always be in his normal position in the driver's cab. It is prohibited to have arms or legs, or generally any part of the body, protruding from the driver's cab of the lift truck.
- The safety belt must be worn and adjusted to the operator's size.
- The control units must never in any event be used for any other than their intended purposes (e.g. climbing onto or down from the lift truck, portmanteau, etc.).
- If the control components are fitted with a forced operation (lever lock) device, it is forbidden to leave the cab without first putting these controls in neutral.
- It is prohibited to carry passengers either on the lift truck or in the cab.

C - ENVIRONMENT

- Comply with site safety regulations.
- If you have to use the lift truck in a dark area or at night, make sure it is equipped with working lights.
- During handling operations, make sure that no one is in the way of the lift truck and its load.
- Do not allow anybody to come near the working area of the lift truck or pass beneath an elevated load.
- When using the lift truck on a transverse slope, before lifting the jib, follow the instructions given in the paragraph: INSTRUCTIONS FOR HANDLING A LOAD: D - TRANSVERSE ATTITUDE OF THE LIFT TRUCK.
- Travelling on a longitudinal slope:
    - Drive and brake gently.
    - Moving without load: Forks or attachment facing downhill. 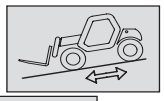
    - Moving with load: Forks or attachment facing uphill. 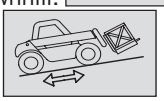
- Take into account the lift truck's dimensions and its load before trying to negotiate a narrow or low passageway.
- Never move onto a loading platform without having first checked:
    - That it is suitably positioned and made fast.
    - That the unit to which it is connected (wagon, lorry, etc.) will not shift.
    - That this platform is prescribed for the total weight of the lift truck to be loaded.
    - That this platform is prescribed for the size of the lift truck.
- Never move onto a foot bridge, floor or freight lift, without being certain that they are prescribed for the weight and size of the lift truck to be loaded and without having checked that they are in sound working order.
- Be careful in the area of loading bays, trenches, scaffolding, soft land and manholes.
- Make sure the ground is stable and firm under the wheels and/or stabilizers before lifting or removing the load. If necessary, add sufficient wedging under the stabilizers.
- Make sure that the scaffolding, loading platform, pilings or ground is capable of bearing the load.
- Never stack loads on uneven ground, they may tip over.

If the load or the attachment must remain above a structure for a long time, there is the risk that it will rest on the structure because of the jib descending owing to the oil in the cylinders cooling down.
To eliminate this risk:
- Regularly check the distance between the load or the attachment and the structure and readjust this if necessary.
- If possible use the lift truck at an oil temperature as close as possible to ambient temperature.

- In the case of work near aerial lines, ensure that the safety distance is sufficient between the working area of the lift truck and the aerial line.

You must consult your local electrical agency. You could be electrocuted or seriously injured if you operate or park the lift truck too close to power cables.

In the event of high winds, do not carry out handling work that jeopardizes the stability of the lift truck and its load, particularly if the load catches the wind badly.

D - VISIBILITY

- The safety of people within the lift truck's working area, as well as that of the lift truck itself and the operator are depend on good operator visibility of the lift truck's immediate vicinity in all situations and at all times.
- This lift truck has been designed to allow good operator visibility (direct or indirect by means of rear-view mirrors) of the immediate vicinity of the lift truck while traveling with no load and with the jib in the transport position.
- Special precautions must be taken if the size of the load restricts visibility towards the front:
    - moving in reverse,
    - site layout,
    - assisted by a person directing the maneuver (while standing outside the truck's area of travel), making sure to keep this person clearly in view at all times.
    - in any case, avoid reversing over long distances.
- Certain special accessories may require the truck to travel with the jib in the raised position. In such cases, visibility on the right hand side is restricted, and special precautions must be taken:
    - site layout,
    - assisted by a person directing the maneuver (while standing outside the truck's area of travel).
- If visibility of your road is inadequate, ask someone to assist by directing the maneuver (while standing outside the truck's area of travel), making sure to keep this person clearly in view at all times.
- Keep all components affecting visibility in a clean, properly adjusted state and in good working order (e.g. windscreens, windows, windscreen wipers, windscreen washers, driving and work lights, rear-view mirrors).

E - STARTING THE LIFT TRUCK

SAFETY INSTRUCTIONS

The lift truck must only be started up or maneuvered when the operator is sitting in the driver's cab, with his seat belt adjusted and fastened.

- Never try to start the lift truck by pushing or towing it. Such operation may cause severe damage to the transmission. If necessary, to tow the lift truck in an emergency, the transmission must be placed in the neutral position (see: 3 - MAINTENANCE: G - OCCASIONAL MAINTENANCE).
- If using an emergency battery for start-up, use a battery with the same characteristics and respect battery polarity when connecting it. Connect at first the positive terminals before the negative terminals.

Failure to respect polarity between batteries can cause serious damage to the electrical circuit. The electrolyte in the battery may produce an explosive gas. Avoid flames and generation of sparks close to the batteries. Never disconnect a battery while it is charging.

INSTRUCTIONS

- Check the closing and locking of the hood(s).
- Check that the cab door is closed.
- Check that the forward/reverse selector is in neutral.
- Turn the ignition key to the position I to activate the electrical system and the preheat.
- Whenever you switch on the lift truck, perform the automatic check on the longitudinal stability limiter and warning device system (see: 2 - DESCRIPTION: INSTRUMENTS AND CONTROLS). Do not use the lift truck if it does not conform to the regulations.
- Check the fuel level on the indicator.
- Turn the ignition key fully: the I.C. engine should then start. Release the ignition key and let the I.C. engine run at idle.
- Do not engage the starter motor for more than 15 seconds and carry out the preheating between unsuccessful attempts.
- Make sure all the signal lights on the control instrument panel are off.
- Check all control instruments when the I.C. engine is warm and at regular intervals during use, so as to quickly detect any faults and to be able to correct them without any delay.
- If an instrument does not show the correct display, stop the I.C. engine and immediately carry out the necessary operations.

F - DRIVING THE LIFT TRUCK

SAFETY INSTRUCTIONS

Operators' attention is drawn to the risks involved in using the lift truck, in particular:
- Risk of losing control.
- Risk of losing lateral and frontal stability of the lift truck.
The operator must remain in control of the lift truck.
In the event of the lift truck overturning, do not try to leave the cabin during the incident. YOUR BEST PROTECTION IS TO STAY FASTENED IN THE CABIN.

- Observe the company's traffic regulations or, by default, the public highway code.
- Do not carry out operations which exceed the capacities of your lift truck or attachments.
- Always drive the lift truck with the forks or attachment to the transport position, i.e. at 300 mm from the ground, the jib retracted and the carriage sloping backwards.
- Only carry loads which are balanced and properly anchored to avoid any risk of a load falling off.
- Ensure that palettes, cases, etc, are in good order and suitable for the load to be lifted.
- Familiarise yourself with the lift truck on the terrain where it will be used.
- Ensure that the service brakes are working properly.
- The loaded lift truck must not travel at speeds in excess of 12 km/h.
- Drive smoothly at an appropriate speed for the operating conditions (land configuration, load on the lift truck).
- Do not use the hydraulic jib controls when the lift truck is moving.
- Never change the steering mode whilst driving.
- Do not manoeuvre the lift truck with the jib in the raised position unless under exceptional circumstances and then with extreme caution, at very low speed and using gentle braking. Ensure that visibility is adequate.
- Take bends slowly.
- In all circumstances make sure you are in control of your speed.
- On damp, slippery or uneven terrain, drive slowly.
- Brake gently, never abruptly.
- Only use the lift truck's forward/reverse selector from a stationary position and never do so abruptly.
- Do not drive with your foot on the brake pedal.
- Always remember that hydrostatic type steering is extremely sensitive to movement of the steering wheel, so turn it gently and not jerkily.
- Never leave the I.C. engine on when the lift truck is unattended.
- Do not leave the cab when the lift truck has a raised load.
- Look where you are going and always make sure you have good visibility along the route.

- Use the rear-view mirrors frequently.
- Drive round obstacles.
- Never drive on the edge of a ditch or steep slope.
- It is dangerous to use two lift trucks simultaneously to handle heavy or voluminous loads, since this operation requires particular precautions to be taken. It must only be used exceptionally and after risk analysis.
- The ignition switch has an emergency stop mechanism in case of an operating anomaly occurring in the case of lift trucks not fitted with a punch-operated cut-out.

INSTRUCTIONS
- Always drive the lift truck with the forks or attachment to the transport position, i.e. at 300 mm from the ground, the jib retracted and the carriage sloping backwards.
- For lift trucks with gearboxes, use the recommended gear (see: 2 - DESCRIPTION: INSTRUMENTS AND CONTROLS).
- Select the steering mode appropriate for its use and/or working conditions (see: 2 - DESCRIPTION: INSTRUMENTS AND CONTROLS) (as model of lift truck).
- Release the parking brake.
- Shift the forward/reverse selector to the selected direction of travel and accelerate gradually until the lift truck moves off.

G - STOPPING THE LIFT TRUCK
SAFETY INSTRUCTIONS
- Never leave the ignition key in the lift truck during the operator's absence.
- When the lift truck is stationary, or if the operator has to leave his cab (even for a moment), place the forks or attachment on the ground, apply the parking brake and place the forward/reverse selector in neutral.
- Make sure that the lift truck is not stopped in any position that will interfere with the traffic flow and at less than one meter from the track of a railway.
- In the event of prolonged parking on a site, protect the lift truck from bad weather, particularly from frost (check the level of antifreeze), close and lock all the lift truck accesses (doors, windows, cowls...).

INSTRUCTIONS
- Park the lift truck on flat ground or on an incline lower than 15 %.
- Set the forward/reverse selector to neutral.
- Apply the parking brake.
- For lift trucks with gearboxes, place the gear lever in neutral.
- Retract entirely the jib.
- Lower the forks or attachment to rest on the ground.
- When using an attachment with a grab or jaws, or a bucket with hydraulic opening, close the attachment fully.
- Before stopping the lift truck after a long working period, leave the I.C. engine idling for a few moments, to allow the coolant liquid and oil to lower the temperature of the I.C. engine and transmission. Do not forget this precaution, in the event of frequent stops or warm stalling of the I.C. engine, or else the temperature of certain parts will rise significantly due to the stopping of the cooling system, with the risk of badly damaging such parts.
- Stop the I.C. engine with the ignition switch.
- Remove the ignition key.
- Lock all the accesses to the lift truck (doors, windows, cowls...).

H - DRIVING THE LIFT TRUCK ON THE PUBLIC HIGHWAY

(or see current legislation in other countries)

SAFETY INSTRUCTIONS
- Operators driving on the public highway must comply with current highway code legislation.
- The lift truck must comply with current road legislation. If necessary, there are optional solutions. Contact your dealer.

INSTRUCTIONS
- Make sure the revolving light is in place, switch it on and verify its operation.
- Make sure the lights, indicators and windscreen wipers are working properly.
- Switch off the working headlights if the lift truck is fitted with them.
- Select the steering mode “HIGHWAY TRAFFIC” (as model of lift truck) (see: 2 - DESCRIPTION: INSTRUMENTS AND CONTROLS).
- Retract entirely the jib and put the attachment at 300 mm from the ground.
- Place the slope correctors in the central position, i.e. the transverse shaft of the axles parallel to the chassis (as model of lift truck).
- Lift up the stabilizers to the maximum and turn the blocks inwards (as model of lift truck).

Never move in neutral (forward/reverse selector or gear lever in neutral or transmission cut-off button pressed) to preserve the lift truck engine brake. Failure to respect this instruction on a slope will lead to excessive speed which may make the lift truck uncontrollable (steering, brakes) and cause serious mechanical damage.

DRIVING THE LIFT TRUCK WITH A FRONT-MOUNTED ATTACHMENT

- You must comply with current regulations in your country, covering the possibility of driving on the public highway with a front-mounted attachment on your lift truck.
- If road legislation in your country authorizes circulation with a front-mounted attachment, you must at least:
    - Protect and report any sharp and/or dangerous edges on the attachment (see: 4 - ADAPTABLE ATTACHMENTS IN OPTION ON THE RANGE: ATTACHMENT SHIELDS).
    - The attachment must not be loaded.
    - Make sure that the attachment does not mask the lighting range of the forward lights.
    - Make sure that current legislation in your country does not require other obligations.

OPERATING THE LIFT TRUCK WITH A TRAILER

- For using a trailer, observe the regulations in force in your country (maximum travel speed, braking, maximum weight of trailer, etc.).
- Do not forget to connect the trailer's electrical equipment to that of the lift truck.
- The trailer's braking system must comply with current legislation.
- If pulling a trailer with assisted braking, the tractor lift truck must be equipped with a trailer braking mechanism. In this case, do not forget to connect the trailer braking equipment to the lift truck.
- The vertical force on the towing hook must not exceed the maximum authorised by the manufacturer (consult the manufacturer's plate on your lift truck).
- The authorised gross vehicle weight must not exceed the maximum weight authorised by the manufacturer (see: 2 - DESCRIPTION: CHARACTERISTICS).

IF NECESSARY, CONSULT YOUR DEALER.

INSTRUCTIONS FOR HANDLING A LOAD

A - CHOICE OF ATTACHMENTS

- Only attachments approved by MANITOU can be used on its lift trucks.
- Make sure the attachment is appropriate for the work to be done (see: 4 - ADAPTABLE ATTACHMENTS IN OPTION ON THE RANGE).
- If the lift truck is equipped with the Single side-shift carriage OPTION (TSDL), use only the authorised attachments (see: 4 - ADAPTABLE ATTACHMENTS IN OPTION ON THE RANGE).
- Make sure the attachment is correctly installed and locked onto the lift truck carriage.
- Make sure that your lift truck attachments work properly.
- Comply with the load chart limits for the lift truck for the attachment used.
- Do not exceed the rated capacity of the attachment.
- Never lift a load in a sling without the attachment provided for the purpose, as the sling risks to slip (see: INSTRUCTIONS FOR HANDLING A LOAD: H - TAKING UP AND LAYING DOWN A SUSPENDED LOAD).

B - MASS OF LOAD AND CENTRE OF GRAVITY

- Before taking up a load, you must know its mass and its centre of gravity.
- The load chart for your lift truck is valid for a load in which the longitudinal position of the centre of gravity is 500 mm from the base of the forks (fig. B1). For a higher centre of gravity, contact your dealer.
- For irregular loads, determine the transverse centre of gravity before any movement (fig. B2) and set it in the longitudinal axis of the lift truck.

It is forbidden to move a load heavier than the effective capacity defined on the lift truck load chart.

For loads with a moving centre of gravity (e.g. liquids), take account of the variations in the centre of gravity in order to determine the load to be handled and be vigilant and take extra care to limit these variations as far as possible.

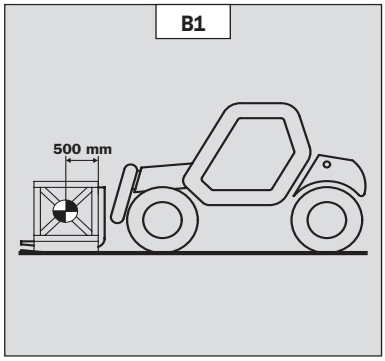

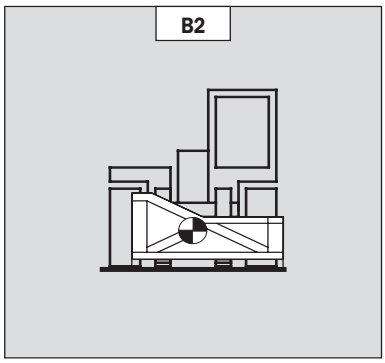

C - LONGITUDINAL STABILITY LIMITER AND WARNING DEVICE

This device gives an indication of the longitudinal stability of the lift truck, and limits hydraulic movements in order to ensure this stability, at least under the following operating conditions:

- when the lift truck is at a standstill,
- when the lift truck is on firm, stable and consolidated ground,
- when the lift truck is performing handling and placing operations.

- Move the jib very carefully when approaching the authorized load limit (see: 2 - DESCRIPTION: INSTRUMENTS AND CONTROLS).
- Always watch this device during handling operations.
- In the event that "AGGRAVATING" hydraulic movements are cut-off, only perform de-aggravating hydraulic movements in the following order (fig. C): if necessary, raise the jib (1), retract the jib as far as possible (2) and lower the jib (3) to set down the load.

The instrument reading may be erroneous when the steering is at its maximum limit or the rear axle oscillated to its limit. Before lifting a load, make sure that the lift truck is not in either of these situations.

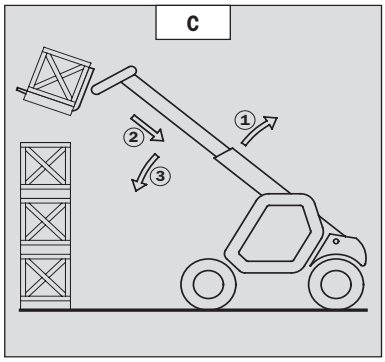

D - TRANSVERSE ATTITUDE OF THE LIFT TRUCK

Depending on the model of lift truck

The transverse attitude is the transverse slope of the chassis with respect to the horizontal.
Raising the jib reduces the lift truck's lateral stability. The transverse attitude must be set with the jib in down position as follows:

1 - LIFT TRUCK WITHOUT SLOPE CORRECTOR USED ON TYRES
- Position the lift truck so that the bubble in the level is between the two lines (see: 2 - DESCRIPTION: INSTRUMENTS AND CONTROLS).

2 - LIFT TRUCK WITH SLOPE CORRECTOR USED ON TYRES
- Correct the slope using the hydraulic control and verify the horizontality via the level. The bubble in the level must be between the two lines (see: 2 - DESCRIPTION: INSTRUMENTS AND CONTROLS).

3 - LIFT TRUCK USED ON STABILIZERS
- Set the two stabilizers on the ground and raise the two front wheels of the lift truck (fig. D1).
- Correct the slope using the stabilizers (fig. D2) and make sure the truck is horizontal by checking the level. The bubble of the level must be between the two lines (see: 2 - DESCRIPTION: INSTRUMENTS AND CONTROLS). In this position, the two front wheels must be off the ground.

D1

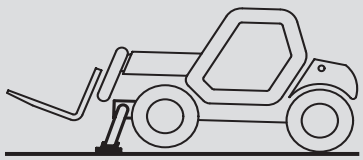

D2

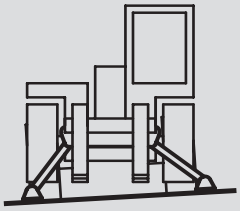

E - TAKING UP A LOAD ON THE GROUND

- Approach the lift truck perpendicular to the load, with the jib retracted and the forks in a horizontal position (fig. E1).
- Adjust the fork spread and centering in connection with the load (fig. E2) (optional solutions exist, consult your dealer).
- Never lift a load with a single fork.

Beware of the risks of trapping or squashing limbs when manually adjusting the forks.

- Move the lift truck forward slowly (1) and bring the forks to stop in front of the load (fig. E3), if necessary, slightly lift the jib (2) while taking up the load.
- Bring the load into the transport position.
- Tilt the load far enough backwards to ensure stability (loss of load on braking or going downhill).

FOR A NON-PALLETIZED LOAD
- Tilt the carriage (1) forwards and move the lift truck slowly forwards (2), to insert the fork under the load (fig. E4) (block the load if necessary).
- Continue to move the lift truck forwards (2) tilting the carriage (3) (fig. E4) backwards to position the load on the forks and check the load's longitudinal and lateral stability.

E1

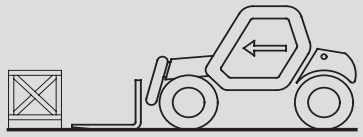

E2

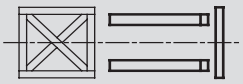

E3

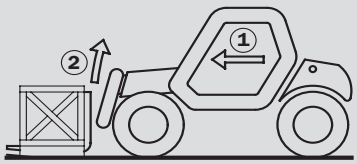

E4

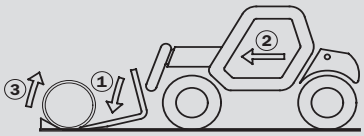

F - TAKING UP AND LAYING A HIGH LOAD ON TYRES

You must not raise the jib if you have not checked the transverse attitude of the lift truck (see: INSTRUCTIONS FOR HANDLING A LOAD: D - TRANSVERSE ATTITUDE OF THE LIFT TRUCK).

REMINDER: Make sure that the following operations can be performed with good visibility (see: OPERATIONS INSTRUCTIONS UNLADEN AND LADEN: D - VISIBILITY).

TAKING UP A HIGH LOAD ON TYRES

- Ensure that the forks will easily pass under the load.
- Lift and extend the jib (1) (2) until the forks are level with the load, moving the lift truck (3) forward if necessary (fig. F1), moving very slowly and carefully.
- Always think about keeping the distance necessary to fit the forks under the load, between the pile and the lift truck (fig. F1) and use the shortest possible length of jib.
- Stop the forks in front of the load by alternately extending and retracting the jib (1) or, if necessary, moving the lift truck forward (2) (fig. F2). Put the handbrake on and set the forward/reverse selector to neutral.
- Slightly lift the load (1) and incline the carriage (2) backwards to stabilize the load (fig. F3).
- Tilt the load sufficiently backwards to ensure its stability.
- Watch the longitudinal stability limiter and warning device (see: INSTRUCTIONS FOR HANDLING A LOAD: C - LONGITUDINAL STABILITY LIMITER AND WARNING DEVICE). If it is overloaded, replace the load in the place from which it was taken.
- If possible lower the load without shifting the lift truck. Lift the jib (1) to release the load, retract (2) and lower the jib (3) to bring the load into the transport position (fig. F4).
- If this is not possible, back up the lift truck (1), manoeuvring very gently and carefully to release the load. Retract (2) and lower the jib (3) to bring the load into the transport position (fig. F5).

F1

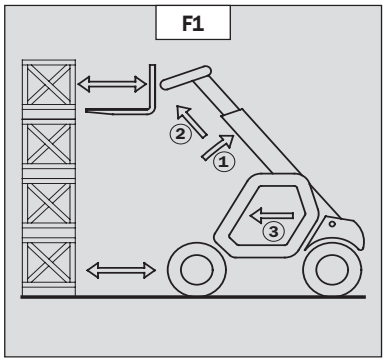

F2

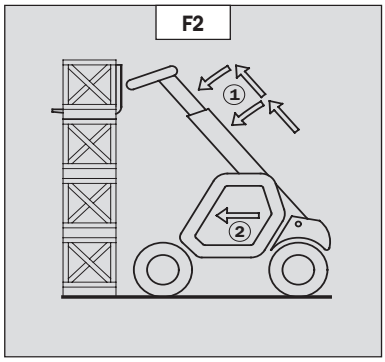

F3

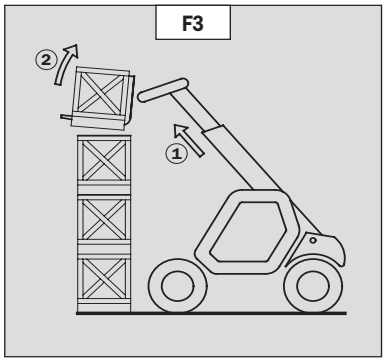

F4

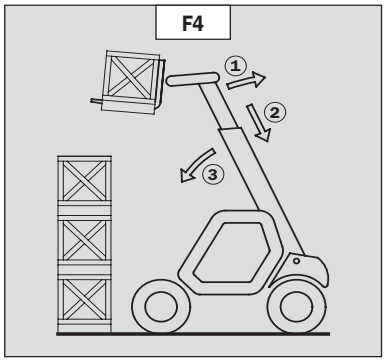

F5

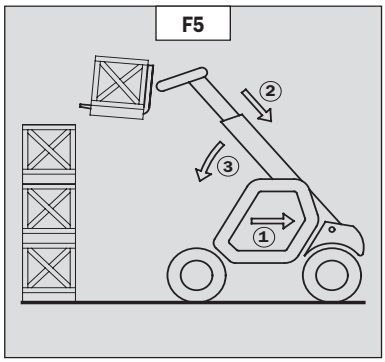

LAYING A HIGH LOAD ON TYRES

- Approach the load in the transport position in front of the pile (fig. F6).
- Put the handbrake on and set the forward/reverse selector to neutral.
- Lift and extend the jib (1) (2) until the load is above the pile, while keeping an eye on the longitudinal stability limiter and warning device (see: INSTRUCTIONS FOR HANDLING A LOAD: C - LONGITUDINAL STABILITY LIMITER AND WARNING DEVICE). If necessary, move the lift truck (3) forward (fig. F7), driving very slowly and carefully.
- Place the load in a horizontal position and lay it down on the pile by lowering and retracting the jib (1) (2) in order to position the load correctly (fig. F8).
- If possible, release the fork by alternately retracting and raising the jib (1) (fig. F9). Then set the forks into transport position.
- If this is not possible, reverse the lift truck (1) very slowly and carefully to release the forks (fig. F10). Then set them into transport position.

F6

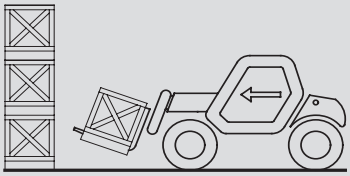

F7

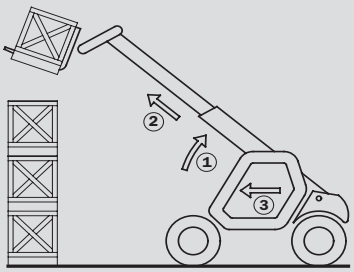

F8

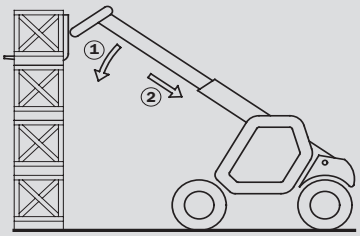

F9

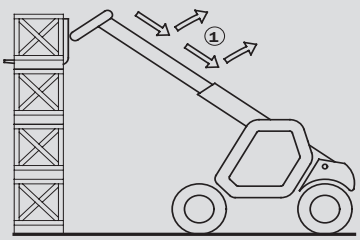

F10

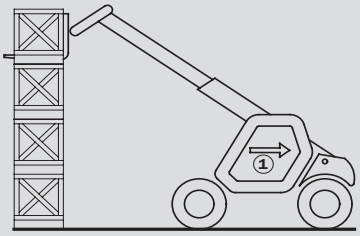

G - TAKING UP AND LAYING A HIGH LOAD ON STABILIZERS

Depending on the model of lift truck

You must not raise the jib if you have not checked the transverse attitude of the lift truck (see: INSTRUCTIONS FOR HANDLING A LOAD: D - TRANSVERSE ATTITUDE OF THE LIFT TRUCK).

REMINDER: Make sure that the following operations can be performed with good visibility (see: OPERATIONS INSTRUCTIONS UNLADEN AND LADEN: D - VISIBILITY).

USING THE STABILIZERS
The stabilizers are used to optimise the lift truck's lifting performances (see: 2 - DESCRIPTION: INSTRUMENTS AND CONTROLS).

POSITION THE STABILIZERS WITH THE FORKS IN TRANSPORT POSITION (UNLADEN AND LADEN)

- Set the forks in transport position in front of the elevation.
- Stay far enough away to have room for the jib to be raised.
- Put the handbrake on and put the gearshift lever into neutral.
- Set the two stabilizers on the ground and lift the two front wheels of the lift truck (fig. G1), while maintaining its transverse stability.

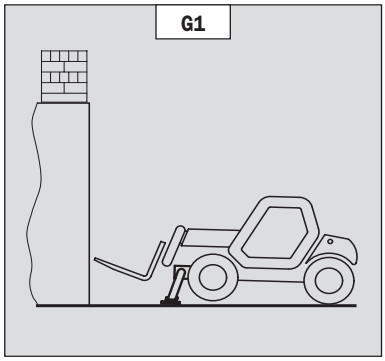

RAISE THE STABILIZERS WITH THE FORKS IN TRANSPORT POSITION (UNLADEN AND LADEN)

- Raise both stabilizers fully and at the same time.

SETTING THE STABILIZERS WITH THE JIB UP (UNLADEN AND LADEN)

This operation must be exceptional and performed with great care.

- Raise the jib and retract the telescopes completely.
- Set the lift truck in position in front of the elevation (fig. G2) moving very slowly and carefully.
- Put the handbrake on and put the gearshift lever into neutral.
- Move the stabilizers very slowly and gradually as soon as they are close to the ground or in contact with it.
- Lower the two stabilizers and lift the two front wheels of the lift truck (fig. G3). During this operation, transverse attitude must be permanently maintained: the bubble in the level must be kept between the two lines.

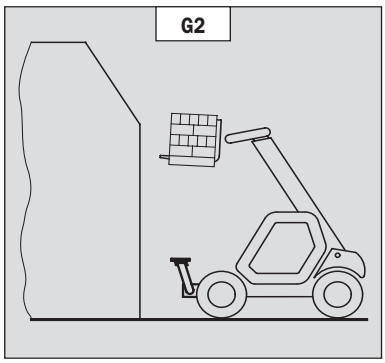

SETTING THE STABILIZERS WITH THE JIB UP (UNLADEN AND LADEN)

This operation must be exceptional and performed with great care.

- Keep the jib up and retract the telescopes completely (fig. G3).
- Move the stabilizers very slowly and gradually as soon as they are in contact with the ground and when they leave the ground. During this operation, the transverse attitude must be permanently maintained: the bubble in the level must be kept between the two lines.
- Raise both stabilizers completely.
- Release the parking brake and reverse the lift truck (1) very slowly and carefully, to release it and lower the forks (2) into transport position (fig. G4).

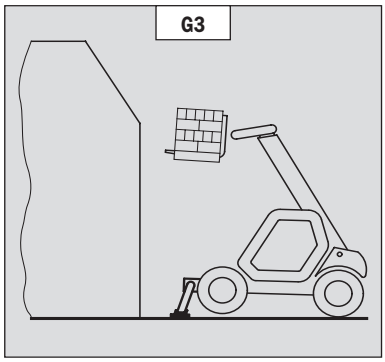

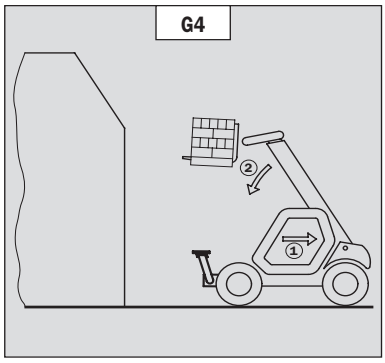

TAKING UP A HIGH LOAD ON STABILIZERS

- Make sure the forks will fit easily under the load.
- Check the position of the lift truck with respect to the load and make a test run, if necessary, without taking the load.
- Raise and extend the jib (1) (2) until the forks are at the level of the load (fig. G5).
- Block the forks in front of the load by alternately using the controls to extend and lower the jib (1) (fig. G6).
- Lift the load slightly (1) and tilt the carriage (2) backwards to stabilise the load (fig. G7).
- Monitor the longitudinal stability limiter and warning device (see: INSTRUCTIONS FOR HANDLING A LOAD: C - LONGITUDINAL STABILITY LIMITER AND WARNING DEVICE). If it is overloaded, set the load down in the place from where it was taken.
- If possible lower the load without moving the lift truck. Raise the jib (1) to release the load, retract (2) and lower the jib (3) to set the load into transport position (fig. G8).

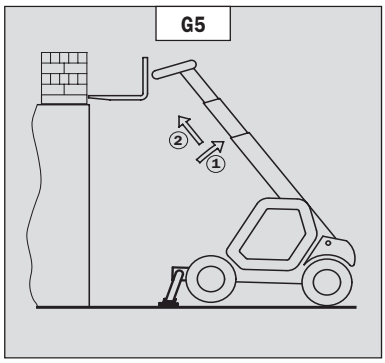

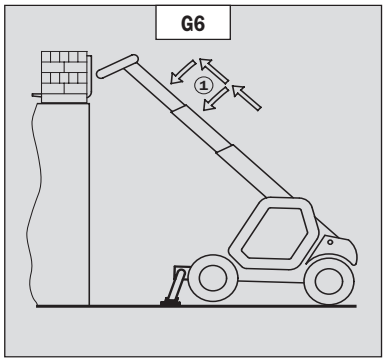

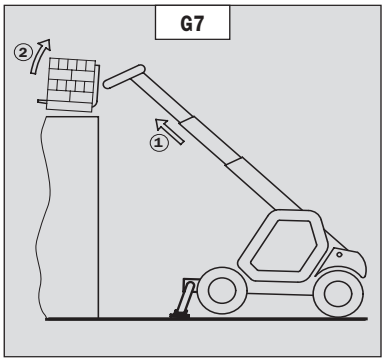

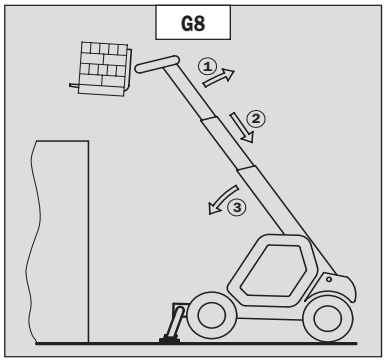

LAYING A HIGH LOAD ON STABILIZERS

- Raise and extend the jib (1) (2) until the load is above the elevation (fig. G9), while monitoring the longitudinal stability limiter and warning device (see: INSTRUCTIONS FOR HANDLING A LOAD: C - LONGITUDINAL STABILITY LIMITER AND WARNING DEVICE).
- Position the load horizontally and release it by lowering and retracting the jib (1) (2) to position the load correctly (fig. G10).
- Release the forks by alternating retracting and raising the jib (3) (fig. G11).
- If possible, set the jib in transport position without moving the lift truck.

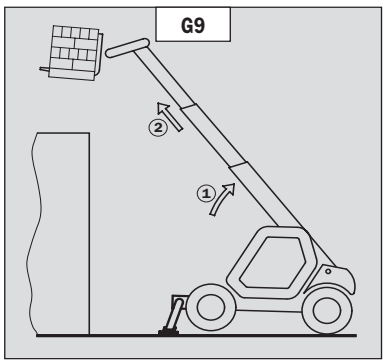

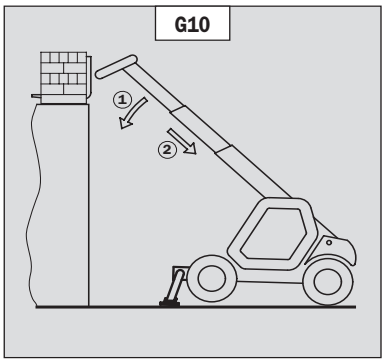

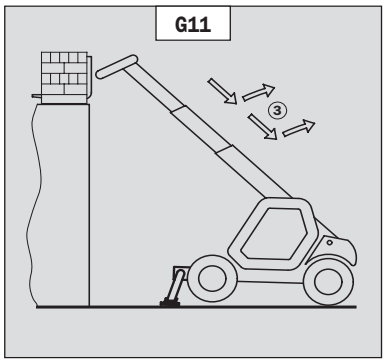

H - TAKING UP AND LAYING DOWN A SUSPENDED LOAD

WARNING: Failure to follow the above instructions may lead the lift truck to loose stability and overturn.

MUST be used with a lift truck equipped with an operational hydraulic movement cut-out device.

CONDITIONS OF USE
- The length of the sling or the chain shall be as short as possible to limit swinging of the load.
- Lift the load vertically along its axis, never by pulling sideways or lengthways.

HANDLING WITHOUT MOVING THE LIFT TRUCK
- Whether on stabilisers or on tyres, the lateral attitude must not exceed 1 % and the longitudinal attitude must not exceed 5%, the bubble of the level must be held at “0”.
- Ensure that the wind speed is not higher than 10 m/s.
- Ensure that there is no one between the load and the lift truck.

I - TRAVELLING WITH A SUSPENDED LOAD
- Before moving, inspect the terrain in order to avoid excessive slopes and cross-falls, bumps and potholes, or soft ground.
- Ensure that the wind speed is not higher than 10 m/s.
- The lift truck must not travel at more than 0.4 m/s (1.5 km/h, i.e., one quarter walking speed).
- Drive and stop the lift truck gently and smoothly to minimise swinging of the load.
- Carry the load a few centimetres above the ground (max. 30 cm) the shortest possible jib length. Do not exceed the offset indicated on the load chart. If the load begins to swing excessively, do not hesitate to stop and lower the jib to set down the load.
- Before moving the lift truck, check the longitudinal stability limiter and warning device (see: 2 - DESCRIPTION: INSTRUMENTS AND CONTROLS), only the green LEDs and possibly the yellow LEDs should be lit.
- During transport, the lift truck operator must be assisted by a person on the ground (standing a minimum of 3 m from the load), who will limit swinging of the load using a bar or a rope. Ensure that this person is always clearly in view.
- The lateral attitude must not exceed 5%, the bubble in the level must be kept between the two “MAX.” marks
- The longitudinal attitude must not exceed 15%, with the load facing uphill, and 10%, with the load facing downhill.
- The jib angle must not exceed 45°.
- If the first red LED of the longitudinal stability limiter and warning device (see: 2 - DESCRIPTION: INSTRUMENTS AND CONTROLS) comes on while travelling, gently bring the lift truck to a stop and stabilise the load. Retract the telescope to reduce the offset of the load.

PLATFORM OPERATING INSTRUCTIONS

For PLATFORM-fitted lift trucks

Installation of the platform on the lift truck is only possible if the shields "operating the platform" of the lift truck and the platform are identical (see: 2 - DESCRIPTION: OPERATING THE PLATFORM).

A - AUTHORISATION FOR USE

- Operation of the platform requires further authorisation in addition to that of the lift truck.

B - SUITABILITY OF THE TRUCK FOR USE

- MANITOU has ensured that this lift truck is suitable for use under the standard operating conditions defined in this operator's manual, with a **STATIC test coefficient of 1.25** and a **DYNAMIC test coefficient of 1.1**, as specified in harmonised standard **EN 280** for "mobile elevating work platforms".
- Before commissioning, the company manager must make sure that the platform is appropriate for the work to be done, and perform certain tests (in accordance with current legislation).

C - PRECAUTIONS WHEN USING THE PLATFORM

- Wear clothes suited for operating the platform, avoid loose clothes.
- Never operate the platform when hands or feet are wet or soiled with greasy substances.
- Always pay attention when using the platform. Do not listen to the radio or music using headphones or earphones.
- For increased comfort, adopt the correct position at the platform's operator station.
- The platform's guard rail exempts the operator from wearing a safety harness under normal operating conditions. As a result, you are responsible deciding whether to wear a safety harness.
- The controls must not be used for any other than their intended purpose (e.g. getting in and out of the lift truck, coat hanger etc.).
- Safety helmets must be worn.
- The operator must always be in the normal operator's position. It is prohibited to have arms or legs, or generally any part of the body, protruding from the basket.
- Ensure that any materials loaded onto the platform (pipes, cables, containers, etc.) cannot fall out. Do not pile these materials to the point where it is necessary to step over them.

D - USING THE PLATFORM

- However experienced they may be, operators must acquaint themselves with the emplacement and operation of all control instruments prior to operating the platform.
- Check before operating that the platform has been correctly assembled and locked onto the lift truck.
- Check before operating the platform that the access gate has been properly locked.
- The platform should be operated in an area free of any obstructions or danger when it is lowered to the ground.
- The operator using the platform must be aided on the ground by a person with adequate training.
- You should stay within the limits set out in the platform load chart.
- The lateral stresses are limited pressure (see: 2 - DESCRIPTION: CHARACTERISTICS).
- It is strictly forbidden to hand a load from the platform or the lift truck jib without a specially designed attachment (see: INSTRUCTIONS FOR HANDLING A LOAD: H - TAKING UP AND LAYING DOWN A SUSPENDED LOAD).
- The platform cannot be used as a crane or a lift for permanently transporting people or materials, nor as jacks or supports.
- The lift truck must not be moved with one (or more) person(s) in the platform.
- It is forbidden to transport people on the platform using the hydraulic controls in the lift truck's driver's cab (except in case of rescue).
- The operator must not get in or out of the platform when it is not on ground level (jib retracted and in the down position).
- The platform must not be fitted with attachments that increase the unit's wind load.
- Do not use ladders or improvised structures in the platform to gain extra height.
- Do not climb onto the sides of the platform to gain extra height.

E - ENVIRONMENT

Operating the platform close to electricity cables is forbidden. Maintain the specified safe distances.

NOMINAL VOLTAGE	DISTANCE ABOVE THE GROUND OR THE FLOOR IN METRES
50 < U < 1000	2,30 M
1000 < U < 30000	2,50 M
30000 < U < 45000	2,60 M
45000 < U < 63000	2,80 M
63000 < U < 90000	3,00 M
90000 < U < 150000	3,40 M
150000 < U < 225000	4,00 M
225000 < U < 400000	5,30 M
400000 < U < 750000	7,90 M

Operation of the platform is strictly forbidden in the event of wind speeds of over 45 km/h.

- The following scale is given for an empiric evaluation of the wind speed:

BEAUFORT scale (wind speed at a height of 10 m from flat ground)						
Force	**Type of wind**	**Speed (knots)**	**Speed (kph)**	**Speed (m/s)**	**Effects on Land**	**Sea condition**
0	Calm	**0 - 1**	**0 - 1**	**< 0,3**	Smoke rises vertically.	Sea like a mirror.
1	Light air	**1 - 3**	**1 - 5**	**0,3 - 1,5**	The wind bends the smoke.	Ripples but without foam crests.
2	Light breeze	**4 - 6**	**6 - 11**	**1,6 - 3,3**	The wind can be felt on the face, shakes the leaves.	Small but evident wavelets.
3	Gentle breeze	**7 - 10**	**12 - 19**	**3,4 - 5,4**	The wind continuously shakes the leaves and twigs.	Large wavelets Perhaps scattered white horses.
4	Moderate breeze	**11 - 16**	**20 - 28**	**5,5 - 7,9**	The wind raises dust and scraps of paper, shakes the twigs.	Small waves. Fairly frequent white horses.
5	Fresh breeze	**17 - 21**	**29 - 38**	**8 - 10,7**	Leafy shrubs sway.	Small waves form on inland waters. Moderate waves, many white horses.
6	Strong breeze	**22 - 27**	**39 - 49**	**10,8 - 13,8**	Shakes thick branches, metal wires hum, it becomes difficult to keep an umbrella open.	Large waves begin to form, white foam crests, probably spray.
7	Near gale	**28 - 33**	**50 - 61**	**13,9 - 17,1**	Whole trees sway, it is difficult to walk against the wind.	Sea heaps up and white foam blown in streaks along the direction of the wind.
8	Gale	**34 - 40**	**62 - 74**	**17,2 - 20,7**	Breaks the branches of trees, it is almost impossible to walk against the wind.	Moderately high waves, crests begin to break into spindrift.
9	Strong gale	**41 - 47**	**75 - 88**	**20,8 - 24,4**	Causes slight damage to buildings (stacks, tiles, etc..).	High waves. Dense foam along the direction of the wind. Crests of waves begin to roll over. Spray may affect visibility.
10	Storm	**48 - 55**	**89 - 102**	**24,5 - 28,4**	Rare inland, uproots trees, causes considerable damage to buildings.	Very high waves with long overhanging crests. Visibility affected.
11	Violent storm	**56 - 63**	**103 - 117**	**28,5 - 32,6**	Very rare, causes extensive devastation.	Exceptionally high waves that may hide medium sized ships. Visibility affected.
12	Hurricane	**64 +**	**118 +**	**32,7 +**	Causes very serious catastrophes.	The air is filled with foam and spray. Sea completely white with driving spray. Visibility very seriously affected.

F - MAINTENANCE

Your platform must be periodically inspected to ensure its continued compliance. The inspection frequency is defined by the current legislation in the country in which the platform is used.

INSTRUCTIONS FOR USING THE RADIO-CONTROL

For lift trucks with RC radio control

HOW TO USE THE RADIO-CONTROL

SAFETY INSTRUCTIONS

- This radio-control consists of electronic and mechanical safety elements. It cannot receive commands from another transmitter because the internal encoding is unique to each radio-control.

If it is used improperly or incorrectly, there is a risk of danger to:
- The physical and mental health of the user or others.
- The lift truck and other neighbouring items.

Everyone working with this radio-control:
- Must be qualified in line with current regulations and therefore appropriately trained.
- Must follow this instruction manual as closely as possible.

- The system is used to control the lift truck remotely via radio waves. Commands are also transmitted if the lift truck is out of sight (behind an obstacle or a building for example), this is why:
  - After stopping the truck and removing the key button (only possible when it is stationary), always place the transmitter in a safe, dry place.
  - Before performing any installation, servicing or repair work, always switch off power sources (in particular, electric welding devices and electric head units on hydraulic distributors must be disconnected at each section).
  - Never remove or alter the safety devices (such as the hand-guard frame, key, emergency stop button, etc.).

Never drive the lift truck if it is not continuously and perfectly within view of the operator!

- Before leaving the transmitter, the operator must make sure that it cannot be used by an unauthorized third person: either by removing the key button from the transmitter or locking it in an inaccessible place.
- The user must ensure that the instruction manual is accessible at all times and that operators have read and understood it.

INSTRUCTIONS

- Take up position in a stable place with no risk of slipping.
- Before using the transmitter, make sure there is nobody within the working area.
- Only use the transmitter with its carrying device or installed correctly on the platform.

When you remove the transmitter, remove the accumulator and key button so that it cannot be used accidentally or deliberately by anyone else.

PROTECTIVE DEVICES

- The lift truck will be immobilised within 450 milliseconds (approx. 0.5 second) at most:
  - If the transmitter emergency stop button (50 milliseconds), or the one on the lift is pressed.
  - If the transmission distance of the radio waves is exceeded.
  - If the transmitter is faulty.
  - If an interfering radio signal is received from elsewhere.
  - If the accumulator is removed from its housing in the transmitter.
  - If the accumulator reaches the end of its autonomy.
  - If the transmitter is switched off by turning the key button to stop.
- These protective devices are provided for the safety of personnel and property and must never be altered, removed or bypassed in any way whatsoever!
- The hand-guard frame prevents external action on a manipulator (if the transmitter falls, for example, or if the operator leans on a guard-rail).
- An electronic safety device prevents radio transmission from being initiated if the manipulators are not mechanically and electrically at rest and if the internal combustion engine speed selector is not set to idle.

In an emergency, press the transmitter emergency stop button immediately ; then follow the manual's instructions (see: 2 - DESCRIPTION: INSTRUMENTS AND CONTROLS).

MAINTENANCE INSTRUCTIONS OF THE LIFT TRUCK

GENERAL INSTRUCTIONS

- Ensure the area is sufficiently ventilated before starting the lift truck.
- Wear clothes suitable for the maintenance of the lift truck, avoid wearing jewellery and loose clothes. Tie and protect your hair, if necessary.
- Stop the I.C. engine and remove the ignition key, when an intervention is necessary.
- Read the operator's manual carefully.
- Carry out all repairs immediately, even if the repairs concerned are minor.
- Repair all leaks immediately, even if the leak concerned is minor.
- Make sure that the disposal of process materials and of spare parts is carried out in total safety and in a ecological way.
- Be careful of the risk of burning and splashing (exhaust, radiator, I.C. engine, etc.).

MAINTENANCE

- Perform the periodic service (see: 3 - MAINTENANCE) to keep your lift truck in good working conditions. Failure to perform the periodic service may cancel the contractual guarantee.

MAINTENANCE LOGBOOK
- The maintenance operations carried out in accordance with the recommendations given in part: 3 - MAINTENANCE and the other inspection, servicing or repair operations or modifications performed on the lift truck or its attachments shall be recorded in a maintenance logbook. The entry for each operation shall include details of the date of the works, the names of the individuals or companies having performed them, the type of operation and its frequency, if applicable. The part numbers of any lift truck items replaced shall also be indicated.

LUBRICANT AND FUEL LEVELS

- Use the recommended lubricants (never use contaminated lubricants).
- Do not fill the fuel tank when the I.C. engine is running.
- Only fill up the fuel tank in areas specified for this purpose.
- Do not fill the fuel tank to the maximum level.
- Do not smoke or approach the lift truck with a flame, when the fuel tank is open or is being filled.

HYDRAULIC

- Any work on the load handling hydraulic circuit is forbidden except for the operations described in part: 3 - MAINTENANCE.
- Do not attempt to loosen unions, hoses or any hydraulic component with the circuit under pressure.

BALANCING VALVE: It is dangerous to change the setting and remove the balancing valves or safety valves which may be fitted to your lift truck cylinders. These operations must only be performed by approved personnel (consult your dealer).

The HYDRAULIC ACCUMULATORS that may be fitted on your lift truck are pressurized units. Removing these accumulators and their pipework is a dangerous operation and must only be performed by approved personnel (consult your dealer).

ELECTRICITY

- Do not short-circuit the starter relay to start the IC engine. If the forward/reverse selector is not in neutral and the parking brake is not engaged, the lift truck may suddenly start to move.
- Do not drop metallic items on the battery.
- Disconnect the battery before working on the electrical circuit.

WELDING

- Disconnect the battery before any welding operations on the lift truck.
- When carrying out electric welding work on the lift truck, connect the negative cable from the equipment directly to the part being welded, so as to avoid high tension current passing through the alternator.
- Never carry out welding or work which gives off heat on an assembled tyre. The heat would increase the pressure which could cause the tyre to explode.
- If the lift truck is equipped with an electronic control unit, disconnect this before starting to weld, to avoid the risk of causing irreparable damage to electronic components.

WASHING THE LIFT TRUCK

- Clean the lift truck or at least the area concerned before any intervention.
- Remember to close and lock all accesses to the lift truck (doors, windows, cowls…).
- During washing, avoid the articulations and electrical components and connections.
- If necessary, protect against penetration of water, steam or cleaning agents, components susceptible of being damaged, particularly electrical components and connections and the injection pump.
- Clean the lift truck of any fuel, oil or grease trace.

FOR ANY INTERVENTION OTHER THAN REGULAR MAINTENANCE, CONSULT YOUR DEALER.

IF THE LIFT TRUCK IS NOT TO BE USED FOR A LONG TIME

INTRODUCTION

The following recommendations are intended to prevent the lift truck from being damaged when it is withdrawn from service for an extended period.
For these operations, we recommend the use of a MANITOU protective product, reference 603726.
Instructions for using the product are given on the packaging.

Procedures to follow if the lift truck is not to be used for a long time and for starting it up again afterwards must be performed by your dealership.

PREPARING THE LIFT TRUCK

- Clean the lift truck thoroughly.
- Check and repair any leakage of fuel, oil, water or air.
- Replace or repair any worn or damaged parts.
- Wash the painted surfaces of the lift truck in clear and cold water and wipe them.
- Touch up the paintwork if necessary.
- Shut down the lift truck (see: OPERATING INSTRUCTIONS UNLADEN AND LADEN).
- Make sure the jib cylinder rods are all in retracted position.
- Release the pressure in the hydraulic circuits.

PROTECTING THE I.C. ENGINE

- Fill the tank with fuel (see: 3 - MAINTENANCE: A - DAILY OR EVERY 10 HOURS SERVICE).
- Empty and replace the cooling liquid (see: 3 - MAINTENANCE: F - EVERY 2000 HOURS SERVICE).
- Leave the I.C. engine running at idling speed for a few minutes, then switch off.
- Replace the I.C. engine oil and oil filter (see: 3 - MAINTENANCE: D - EVERY 500 HOURS SERVICE).
- Add the protective product to the engine oil.
- Run the I.C. engine for a short time so that the oil and cooling liquid circulate inside.
- Disconnect the battery and store it in a safe place away from the cold, after charging it to a maximum.
- Remove the injectors and spray the protective product into each cylinder for two seconds with the piston in low neutral position.
- Turn the crankshaft once slowly and refit the injectors (see I.C. engine REPAIR MANUAL).
- Remove the intake hose from the manifold or turbocharger and spray the protective product into the manifold or turbocharger.
- Cap the intake manifold or turbocharger hole with waterproof adhesive tape.
- Remove the exhaust pipe and spray the protective product into the exhaust manifold or turbocharger.
- Refit the exhaust pipe and block the outlet with waterproof adhesive tape.

NOTE: The spray time is noted on the product packaging and must be increased by 50 % for turbo engines.

- Open the filler plug, spray the protective product around the rocker arm shaft and refit the filler plug.
- Cap the fuel tank using waterproof adhesive tape.
- Remove the drive belts and store them in a safe place.
- Disconnect the engine cut-off solenoid on the injection pump and carefully insulate the connection.

PROTECTING THE LIFT TRUCK

- Set the lift truck on axle stands so that the tyres are not in contact with the ground and release the handbrake.
- Protect cylinder rods which will not be retracted, from corrosion.
- Wrap the tyres.

NOTE: If the lift truck is to be stored outdoors, cover it with a waterproof tarpaulin.

BRINGING THE LIFT TRUCK BACK INTO SERVICE

- Remove the waterproof adhesive tape from all the holes.
- Refit the intake hose.
- Refit and reconnect the battery.
- Remove the protection from the cylinder rods.
- Perform the daily service (see: 3 - MAINTENANCE: A - DAILY OR EVERY 10 HOURS SERVICE).
- Put the handbrake on and remove the axle stands.
- Empty and replace the fuel and replace the fuel filter (see: 3 - MAINTENANCE: D - EVERY 500 HOURS SERVICE).
- Refit and set the tension in the drive belts (see: 3 - MAINTENANCE: C - EVERY 250 HOURS SERVICE).
- Turn the I.C. engine using the starter, to allow the oil pressure to rise.
- Reconnect the engine cut-off solenoid.
- Lubricate the lift truck completely (see: 3 - MAINTENANCE: SERVICING SCHEDULE).

Make sure the area is adequately ventilated before starting up the lift truck.

- Start up the lift truck, following the safety instructions and regulations (see: OPERATING INSTRUCTIONS UNLADEN AND LADEN).
- Run all the jib's hydraulic movements, concentrating on the ends of travel for each cylinder.

2 - DESCRIPTION

TABLE OF CONTENTS

«EC» DECLARATION OF CONFORMITY 2-4

IDENTIFICATION OF THE LIFT TRUCK 2-6

CHARACTERISTICS MT 1440 A E3 (WITH FLOATING FORK CARRIAGE) 2-8

CHARACTERISTICS MT 1440 A E3 (WITH EXTENSIBLE PLATFORM 2M25/4M 1000KG) 2-10

CHARACTERISTICS MT 1840 A E3 (WITH FLOATING FORK CARRIAGE) 2-12

CHARACTERISTICS MT 1840 A E3 (WITH EXTENSIBLE PLATFORM 2M25/4M 1000KG) 2-14

FRONT AND REAR TIRES 2-16

DIMENSIONS AND LOAD CHART MT 1440 A E3 (WITH FLOATING FORK CARRIAGE) 2-18

DIMENSIONS AND LOAD CHART MT 1440 A E3 (WITH EXTENSIBLE PLATFORM 2M25/4M 1000KG) 2-20

DIMENSIONS AND LOAD CHART MT 1840 A E3 (WITH FLOATING FORK CARRIAGE) 2-22

DIMENSIONS AND LOAD CHART MT 1840 A E3 (WITH EXTENSIBLE PLATFORM 2M25/4M 1000KG) 2-24

INSTRUMENTS AND CONTROLS 2-26

USING THE PLATFORM 2-56

USING THE RADIO-CONTROL FOR HANDLING (OPTION) 2-62

TOWING PIN AND HOOK 2-64

DESCRIPTION AND USE OF THE OPTIONS 2-66

«EC» DECLARATION OF CONFORMITY

1) DÉCLARATION «CE» DE CONFORMITÉ (originale)

«EC» DECLARATION OF CONFORMITY (original)

2) La société, *The company* : **MANITOU BF**

3) Adresse, *Address* : **430, rue de l'Aubinière - BP 10249 - 44158 - ANCENIS CEDEX - FRANCE**

4) Dossier technique, *Technical file* : **MANITOU BF - 430, rue de l'Aubinière**
BP 10249 - 44158 - ANCENIS CEDEX - FRANCE

5) Constructeur de la machine décrite ci-après, *Manufacturer of the machine described below* :

MT 1440 A E3
MT 1840 A E3

6) Déclare que cette machine, *Declares that this machine* :

7) Est conforme aux directives suivantes et à leurs transpositions en droit national, *Complies with the following directives and their transpositions into national law* :

2006/42/CE

8) Pour les machines annexe IV , *For annex IV machines* :

9) Numéro d'attestation, *Certificate number* : 0062/5131/760/09/2010/XXXX
Ext 001/01/10

10) Organisme notifié, *Notified body* : BUREAU VÉRITAS, NB°0062
67-71 Boulevard du Château
92200 Neuilly sur Seine FRANCE

15) Normes harmonisées utilisées, *Harmonised standards used* :

16) Normes ou dispositions techniques utilisées, *Standards or technical provisions used* :

17) Fait à, *Done at* : **Ancenis**

18) Date, *Date* : **21/01/2011**

19) Nom du signataire, *Name of signatory* : **Christian CALECA**

20) Fonction, *Function* : **Directeur Général Adjoint**

21) Signature, *Signature* :

bg : 1) удостоверение за « CE » съответствие (оригинална), 2) Фирмата, 3) Адрес, 4) Техническо досие, 5) Фабрикант на описаната по-долу машина, 6) Обявява, че тази машина, 7) Отговаря на следните директиви и на тяхното съответствие национално право, 8) За машините към допълнение IV, 9)Номер на удостоверението, 10) Наименувана фирма, 15) хармонизирани стандарти използвани, 16) стандарти или технически правила, използвани, 17) Изработено в, 18) Дата, 19) Име на разписалия се, 20) Функция, 21) Функция.

cs : 1) ES prohlášení o shodě (původní), 2) Název společnosti, 3) Adresa, 4) Technická dokumentace, 5) Výrobce níže uvedeného stroje, 6) Prohlašuje, že tento stroj, 7) Je v souladu s následujícími směrnicemi a směrnicemi transponovanými do vnitrostátního práva, 8) Pro stroje v příloze IV, 9) Číslo certifikátu, 10) Notifikační orgán, 15) harmonizované normy použity, 16) Norem a technických pravidel používaných, 17) Místo vydání, 18) Datum vydání, 19) Jméno podepsaného, 20) Funkce, 21) Podpis.

da : 1) EF Overensstemmelseserklæring (original), 2) Firmaet, 3) Adresse, 4) tekniske dossier, 5) Konstruktør af nedenfor beskrevne maskine, 6) Erklærer, at denne maskine, 7) Overholder nedennævnte direktiver og disses gennemførelse til national ret, 8) For maskiner under bilag IV, 9) Certifikat nummer, 10) Bemyndigede organ, 15) harmoniserede standarder, der anvendes, 16) standarder eller tekniske regler, 17) Udfærdiget i, 18) Dato, 19) Underskrivers navn, 20) Funktion, 21) Underskrift.

de : 1) EG-Konformitätserklärung (original), 2) Die Firma, 3) Adresse, 4) Technischen Unterlagen, 5) Hersteller der nachfolgend beschriebenen Maschine, 6) Erklärt, dass diese Maschine, 7) den folgenden Richtlinien und deren Umsetzung in die nationale Gesetzgebung entspricht, 8) Für die Maschinen laut Anhang IV, 9) Bescheinigungsnummer, 10) Benannte Stelle, 15) angewandten harmonisierten Normen, 16) angewandten sonstigen technischen Normen und Spezifikationen, 17) Ausgestellt in, 18) Datum, 19) Name des Unterzeichners, 20) Funktion, 21) Unterschrift.

el : 1) Δήλωση συμμόρφωσης CE (πρωτότυπο), 2) Η εταιρεία, 3) Διεύθυνση, 4) τεχνικό φάκελο, 5) Κατασκευάστρια του εξής περιγραφόμενου μηχανήματος, 6) Δηλώνει ότι αυτό το μηχάνημα, 7) Είναι σύμφωνο με τις εξής οδηγίες και τις προσαρμογές τους στο εθνικό δίκαιο, 8) Για τα μηχανήματα παραρτήματος IV, 9) Αριθμός δήλωσης, 10) Κοινοποιημένος φορέας, 15) εναρμονισμένα πρότυπα που χρησιμοποιούνται, 16) Πρότυπα ή τεχνικούς κανόνες που χρησιμοποιούνται, 16) Είναι σύμφωνο με τα εξής πρότυπα και τεχνικές διατάξεις, 17) Εν, 18) Ημερομηνία, 19) Όνομα του υπογράφοντος, 20) Θέση, 21) Υπογραφή.

es : 1)Declaración DE de conformidad (original), 2) La sociedad, 3) Dirección, 4) expediente técnico, 5) Constructor de la máquina descrita a continuación, 6) Declara que esta máquina, 7) Está conforme a las siguientes directivas y a sus transposiciones en derecho nacional, 8) Para las máquinas anexo IV, 9) Número de certificación, 10) Organismo notificado, 15) normas armonizadas utilizadas, 16) Otras normas o especificaciones técnicas utilizadas, 17) Hecho en, 18) Fecha, 19) Nombre del signatario, 20) Función, 21) Firma.

et : 1) EÜ vastavusdeklaratsioon (algupärane), 2) Äriühing, 3) Aadress, 4) Tehniline dokumentatsioon, 5) Seadme tootja, 6) Kinnitab, et see toode, 7) On vastavuses järgmiste direktiivide ja nende riigisisesesse õigusesse ülevõtmiseks vastuvõetud õigusaktidega, 8) IV lisas loetletud seadmete puhul, 9) Tunnistuse number, 10) Sertifitseerimisasutus, 15) kasutatud ühtlustatud standarditele, 16) Muud standardites või spetsifikatsioonides kasutatakse, 17) Väljaandmise koht, 18) Väljaandmise aeg, 19) Allkirjastaja nimi, 20) Amet, 21) Allkiri.

fi : 1) EY-vaatimustenmukaisuusvakuutus (alkuperäiset), 2) Yritys, 3) Osoite, 4) teknisen eritelmän, 5) Jäljessä kuvatun koneen valmistaja, 6) Vakuuttaa, että tämä kone, 7) Täyttää seuraavien direktiivien sekä niitä vastaavien kansallisten säännösten vaatimukset, 8) Liitteen IV koneiden osalta, 9) Todistuksen numero, 10) Ilmoitettu laitos, 15) yhdenmukaistettuja standardeja käytetään, 16) muita standardeja tai eritelmät, 17) Paikka, 18) Aika, 19) Allekirjoittajan nimi, 20) Toimi, 21) Allekirjoitus.

ga : 1) « EC »dearbhú comhréireachta (bunaidh), 2) An comhlacht, 3) Seoladh, 4) comhad teicniúil, 5) Déantóir an innill a thuairiscítear thíos, 6) Dearbhaíonn sé go bhfuil an t-inneall, 7) Go gcloíonn sé le na treoracha seo a leanas agus a trasuímh isteach i ndlí náisiúnta, 8) Le haghaidh innill an aguisín IV, 9) Uimhir teastais, 10) Comhlacht a chuireadh i bhfios, 15) caighdeáin comhchuibhithe a úsáidtear, 16) caighdeáin eile nó sonraíochtaí teicniúla a úsáidtear, 17) Déanta ag, 18) Dáta, 19) Ainm an tsínitheora, 20) Feidhm, 21) Síniú.

hu : 1) CE megfelelőségi nyilatkozat (eredeti), 2) A vállalat, 3) Cím, 4) műszaki dokumentáció, 5) Az alábbi gép gyártója, 6) Kijelenti, hogy a gép, 7) Megfelel az alábbi irányelveknek valamint azok honosított előírásainak, 8) A IV. melléklet gépeihez, 9) Bizonylati szám, 10) Értesített szervezet, 15) felhasznált harmonizált szabványok, 16) egyéb felhasznált műszaki szabványok és előírások hivatkozásai, 17) Kelt (hely), 18) Dátum, 19) Aláíró neve, 20) Funkció, 21) Aláírás.

is : 1) (Samræmisvottorð ESB (upprunalega), 2) Fyrirtækið, 3) Aðsetur, 4) Tæknilegar skrá, 5) Smiður tækisins sem lýst er hér á eftir, 6) Staðfestir að tækið, 7) Samræmist eftirfarandi stöðlum og staðfærslu þeirra með hliðsjón af þjóðarrétti, 8) Fyrir tækin í aukakafla IV, 9) Staðfestingarnúmer, 10) Tilkynnt til, 15) samhæfða staðla sem notaðir, 16) önnur staðlar eða forskriftir notað, 17) Staður, 18) Dagsetning, 19) Nafn undirritaðs, 20) Staða, 21) Undirskrift.

it : 1) Dichiarazione CE di conformità (originale), 2) La società, 3) Indirizzo, 4) fascicolo tecnico, 5) Costruttore della macchina descritta di seguito, 6) Dichiara che questa macchina, 7) È conforme alle direttive seguenti e alle relative trasposizioni nel diritto nazionale, 8) Per le macchine Allegato IV, 9) Numero di Attestazione, 10) Organismo notificato, 15) norme armonizzate applicate, 16) altre norme e specifiche tecniche applicate, 17) Stabilita a, 18) Data, 19) Nome del firmatario, 20) Funzione, 21) Firma.

lt : 1) CE atitikties deklaracija (originalas), 2) Bendrovė, 3) Adresas, 4) Techninė byla, 5) Žemiau nurodytas įrenginio gamintojas, 6) Pareiškia, kad šis įrenginys, 7) Atitinka toliau nurodytas direktyvas ir į nacionalinius teisės aktus perkeltas jų nuostatas, 8) IV priedas dėl mašinų, 9) Sertifikato Nr, 10) Paskelbtoji įstaiga, 15) suderintus standartus naudojamus, 16) Kiti standartai ir technines specifikacijas, 17) Pasirašyta, 18) Data, 19) Pasirašiusio asmens vardas ir pavardė, 20) Pareigos, 21) Parašas.

lv : 1) EK atbilstības deklarācija (oriģināls), 2) Uzņēmums, 3) Adrese, 4) tehniskās lietas, 5) Tālāk aprakstītās iekārtas ražotājs, 6) Apliecina, ka šī iekārta, 7) Ir atbilstoša tālāk norādītajām direktīvām un to transpozīcijai nacionālajā likumdošanā, 8) Iekārtām IV pielikumā, 9) Apliecības numurs, 10) Reģistrētā organizācija, 15) lietotajiem saskaņotajiem standartiem, 16) lietotajiem tehniskajiem standartiem un specifikācijām, 17) Sastādīts, 18) Datums, 19) Parakstītāja vārds, 20) Amats, 21) Paraksts.

mt : 1) Dikjarazzjoni ta' Konformità KE (originali), 2) Il-kumpanija, 3) Indirizz, 4) fajl tekniku, 5) Manifatturi tal-magna deskritta hawn isfel, 6) Tiddikjara li din il-magna, 7) Hija konformi hija konformi mad-Direttivi segwenti u l-liġijiet li jimplimentawhom fil-liġi nazzjonali, 8) Għall-magni fl-Anness IV, 9) Numru taċ-ċertifikat, 10) Entità nnotifikata, 15) l-istandards armonizzati użati, 16) standards tekniċi u speċifikazzjonijiet oħra użati, 17) Magħmul f', 18) Data, 19) Isem il-firmatarju, 20) Kariga, 21) Firma.

nl : 1) EG-verklaring van overeenstemming (oorspronkelijke), 2) Het bedrijf, 3) Adres, 4) technisch dossier, 5) Constructeur van de hierna genoemde machine, 6) Verklaart dat deze machine, 7) In overeenstemming is met de volgende richtlijnen en hun omzettingen in het nationale recht, 8) Voor machines van bijlage IV, 9) Goedkeuringsnummer, 10) Aangezegde instelling, 15) gehanteerde geharmoniseerde normen, 16) andere gehanteerde technische normen en specificaties, 17) Opgemaakt te, 18) Datum, 19) Naam van ondergetekende, 20) Functie, 21) Handtekening.

no : 1) CE-samsvarserklæring (original), 2) Selskapet, 3) Adresse, 4) tekniske arkiv, 5) Fabrikant av følgende maskin, 6) Erklærer at denne maskinen, 7) Oppfyller kravene i følgende direktiver, med nasjonale gjennomføringsbestemmelser, 8) For maskinene i tillegg IV, 9) Attestnummer, 10) Notifisert organ, 15) harmoniserte standarder som brukes, 16) Andre standarder og spesifikasjoner brukt, 17) Utstedt i, 18) Dato, 19) Underskriverens navn, 20) Stilling, 21) Underskrift.

pl : 1) Deklaracja zgodności CE (oryginalne), 2) Spółka, 3) Adres, 4) dokumentacji technicznej, 5) Wykonawca maszyny opisanej poniżej, 6) Oświadcza, że ta maszyna, 7) Jest zgodna z następującymi dyrektywami i odpowiadającymi przepisami prawa krajowego, 8) Dla maszyn załącznik IV, 9) Numer certyfikatu, 10) Jednostka certyfikująca, 15) zastosowanych norm zharmonizowanych, 16) innych zastosowanych norm technicznych i specyfikacji, 17) Sporządzono w, 18) Data, 19) Nazwisko podpisującego, 20) Stanowisko, 21) Podpis.

pt : 1) Declaração de conformidade CE (original), 2) A empresa, 3) Morada, 4) processo técnico, 5) Fabricante da máquina descrita abaixo, 6) Declara que esta máquina, 7) Está em conformidade às directivas seguintes e às suas transposições para o direito nacional, 8) Para as máquinas no anexo IV, 9) Número de certificado, 10) Entidade notificada, 15) normas harmonizadas utilizadas, 16) outras normas e especificações técnicas utilizadas, 17) Elaborado em, 18) Data, 19) Nome do signatário, 20) Cargo, 21) Assinatura.

ro : 1) Declarație de conformitate CE (originală), 2) Societatea, 3) Adresa, 4) cărtii tehnice, 5) Constructor al maşinii descrise mai jos, 6) Declară că prezenta maşină, 7) Este conformă cu directivele următoare şi cu transpunerea lor în dreptul naţional, 8) Pentru maşinile din anexa IV, 9) Număr de atestare, 10) Organism notificat, 15) standardele armonizate utilizate, 16) alte standarde si specificatii tehnice utilizate, 17) Întocmit la, 18) Data, 19) Numele persoanei care semnează, 20) Funcţia, 21) Semnătura.

sk : 1) ES vyhlásenie o zhode (pôvodný), 2) Názov spoločnosti, 3) Adresa, 4) technickej dokumentácie, 5) Výrobca nižšie opísaného stroja, 6) Vyhlasuje, že tento stroj, 7) Je v súlade s nasledujúcimi smernicami a smernicami transponovanými do vnútroštátneho práva, 8) Pre stroje v prílohe IV, 9) Číslo certifikátu, 10) Notifikačný orgán, 15) použité harmonizované normy, 16) použité iné technické normy a predpisy, 17) Miesto vydania, 18) Dátum vydania, 19) Meno podpisujúceho, 20) Funkcia, 21) Podpis.

sl : 1) ES Izjava o ustreznosti (izvirna), 2) Družba. 3) Naslov. 4) tehnične dokumentacije, 5) Proizvajalac tukaj opisanega stroja, 6) Izjavlja, da je ta stroj, 7) Ustreza naslednjim direktivam in njihovi transpoziciji v državno pravo, 8) Za stroje priloga IV, 9) Številka potrdila, 10) Obvestilo organu, 15) uporabljene harmonizirane standarde, 16) druge uporabljene tehnične standarde in zahteve, 17) V, 18) Datum, 19) Ime podpisnika, 20) Funkcija, 21) Podpis.

sv : 1) CE-försäkran om överensstämmelse (original), 2) Företaget, 3) Adress, 4) tekniska dokumentationen, 5) Konstruktör av nedan beskrivna maskin, 6) Försäkrar att denna maskin, 7) Överensstämmer med nedanstående direktiv och införlivandet av dem i nationell rätt, 8) För maskinerna i bilaga IV, 9) Nummer för godkännande, 10) Organism som underrättats, 15) Harmoniserade standarder som använts, 16) andra tekniska standarder och specifikationer som använts, 17) Upprättat i, 18) Datum, 19) Namn på den som undertecknat, 20) Befattning, 21) Namntecknin.

IDENTIFICATION OF THE LIFT TRUCK

As our policy is to promote a constant improvement of our products, our range of telescopic lift trucks may undergo certain modifications, without obligation for us to advise our customers.

When you order parts, or when you require any technical information, always specify:

NOTE: For the owner's convenience, it is recommended that a note of these numbers is made in the spaces provided, at the time of the delivery of the lift truck.

LIFT TRUCK MANUFACTURER'S PLATE (FIG. A)

- Model .....
- Series .....
- Serial Nr .....
- Year of manufacture .....

For any further technical information regarding your lift truck refer to chapter: 2 - DESCRIPTION: CHARACTERISTICS.

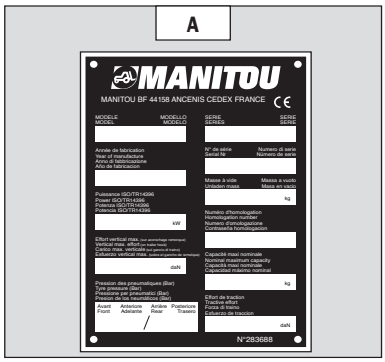

I.C. ENGINE (FIG. B)

- I.C. engine Nr .....

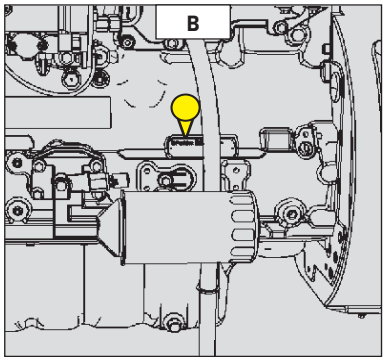

GEAR BOX (FIG. C)

- Type .....
- MANITOU reference .....
- Serial Nr .....

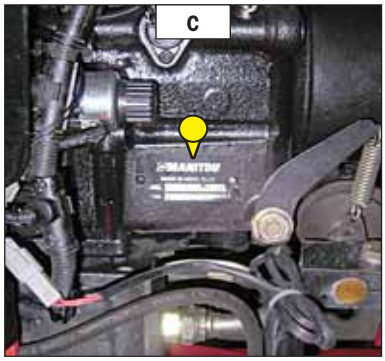

FRONT AXLE (FIG. D)

- Type .....
- Serial Nr .....
- MANITOU reference .....

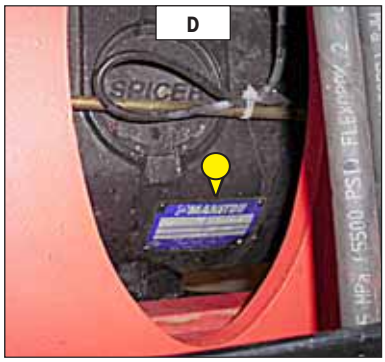

REAR AXLE (FIG. E)

- Type .....
- Serial Nr .....
- MANITOU reference .....

CAB (FIG. F)

- Type .....
- Serial Nr .....

JIB (FIG. G)

- MANITOU reference .....
- Date of manufacture .....

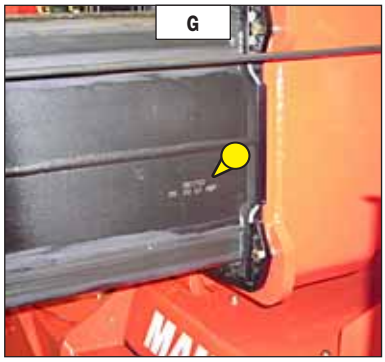

PLATE MANUFACTURER OF THE ATTACHMENT (FIG. H)

- Model .....
- Serial Nr .....
- Year of manufacture .....

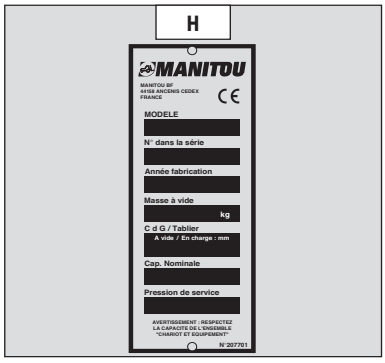

CHARACTERISTICS

MT 1440 A E3 (WITH FLOATING FORK CARRIAGE)

I.C. ENGINE		
Type		PERKINS 1104D-44TA RP52117
Fuel		Diesel
Number of cylinders		4 in line
Suction		Supercharged
Injection system		Direct
Ignition sequence		1.3.4.2
Capacity	cm3	4400
Bore and stroke	mm	105 x 127
Compression ratio		18,2/1
Nominal rating loaded	rpm	2200
Rating slow unladen	rpm	850
Max. rating unladen	rpm	2350
Power ISO/TR 14396	cv- kW	101 - 74,5
Power SAE J 1995	cv- kW	101 - 74,5
Maximum torque ISO/TR 14396	Nm	400 to 1400 rpm
Air cleaner	µm	3
Type of cooling		By water
Fan		Puller

TRANSMISSION		
Gear box		DANA
Type		Mechanical
Forward/reverse selector		Electro-hydraulic
Torque converter		DANA
Number of forward speeds		4
Number of reverse speeds		4
Angle gear box		-
Front axle		DANA
Differential		Without locking
Rear axle		DANA
Differential		Without locking
Drive wheels		4RM Permanent
Switch for 2/4 drive wheels		No
Front tyres		MICHELIN
Size		400/80-24 162A8 TUBELESS
Pressure	bar	5
Rear tyres		MICHELIN
Size		400/80-24 162A8 TUBELESS
Pressure	bar	5

ELECTRIC CIRCUIT	
Battery	12 V - 110 Ah - 900 A EN
Alternator	12 V - 85 A
Type	DENSO A115i
Starter	12 V - 3,2 kW
Type	ISKRA AZE

BRAKE CIRCUIT	
Service brake	Hydraulic power brake
Type of brake	Multidisk brake immersed in oil
Type of control	Foot-operated for the front and rear axles
Parking brake	Low pressure brake
Type of brake	Disk on gear-box output
Type of control	Electro-hydraulic

SOUND AND VIBRATION		
Level of sound pressure in the driver's cab LpA (according to standard NF EN 12053)	dB	82 (cab closed)
Level of sound power ensured in the LwA environment (according to directive 2000/14/EC modified by directive 2005/88/EC)	dB	105 (measured) 106 (ensured)
Average weighted acceleration on driver's body (according to standard NF EN 13059)	m/s2	0,985
The average weighted acceleration transmitted to the driver's hand/arm system (according to standard ISO 5349-2)	m/s2	< 2,5

HYDRAULIC CIRCUIT			
Hydraulic pump			
Type		Gear pump with flow divider on 2nd casing	
		1st casing	2nd casing
Capacity	cm3	45	27
Max. rating capacity unladen	l/mn	106	64
Flow rate at 1600 rpm	l/mn	72	44
Filtration			
Return	µm	16	16
Suction	µm	135	135
Maximum service pressure	bar	265	
Telescoping circuit	bar	190 / 265	
Lifting circuit	bar	210 / 265	
Tilt circuit	bar	280 / 190	
Stabilizers Circuit	bar	265	
Tilting corrector circuit	bar	265	
Attachment circuit	bar	265	
Steering circuit	bar	140	

HYDRAULIC MOVEMENTS		
Longitudinal stability limiter and warning device		Electronic
Lifting motions (jib retracted)		
Unladen lifting	s - m/mn	15,72 - 23,6
Laden lifting	s - m/mn	15,73 - 23,6
Unladen lowering	s - m/mn	13,33 - 27,8
Laden lowering	s - m/mn	13,36 - 27,8
Telescoping motions (jib raised)		
Unladen extending	s - m/mn	27,35 - 16,5
Laden extending	s - m/mn	27,56 - 16,7
Unladen retracting	s - m/mn	14,83 - 30,7
Laden retracting	s - m/mn	14,88 - 30,6
Tilting movements		
Unladen digging	s - °/s	5,19 - 24,3
Forward tilting unladen	s - °/s	5,07 - 24,8

SPECIFICATIONS AND WEIGHTS			
Speed of movement for lift truck in standard configuration on flat ground (except particular conditions)			
Front unladen	1	km/h	5,1
	2	km/h	8,1
	3	km/h	15,2
	4	km/h	25,7
Rear unladen	1	km/h	5,1
	2	km/h	8,1
	3	km/h	15,2
	4	km/h	25,7
Standard attachment			TFF 45 MT1040
Weight with forks		kg	228
Weight of forks (each one)		kg	71
Rated capacity with standard attachment		kg	4000
Tipping load at maximum reach on stabilisers		kg	1950
Distance from the centre of gravity from the load to the lug of the forks		mm	500
Standard lifting height		mm	13530
Lift truck weight without attachment		kg	10745
Lift truck weight with standard attachment			
Unladen		kg	11115
At rated load		kg	15115
Weight per axle with standard attachment (transport position)			
Front unladen		kg	5355
Rear unladen		kg	5760
Front rated load		kg	12615
Rear rated load		kg	2500
Weight per axle with standard attachment (jib extended)			
Front rated load		kg	10995
Rear rated load		kg	420
Contact pressure on the ground for the whole surface of each stabilizer at maximum load when tilting		kg/cm2	5,57
Authorised gross vehicle weight		daN	20000
Drag strain on the coupling hook			
Unladen (sliding)		daN	6235
At rated load (transmission setting)		daN	8240
Pull strain with open carrier (according to standard ISO 8313)		daN	5857

CHARACTERISTICS

MT 1440 A E3 (WITH EXTENSIBLE PLATFORM 2M25/4M 1000KG)

I.C. ENGINE		
Type		PERKINS 1104D-44TA RP52117
Fuel		Diesel
Number of cylinders		4 in line
Suction		Supercharged
Injection system		Direct
Ignition sequence		1.3.4.2
Capacity	cm3	4400
Bore and stroke	mm	105 x 127
Compression ratio		18,2/1
Nominal rating loaded	rpm	2200
Rating slow unladen	rpm	850
Max. rating unladen	rpm	2350
Power ISO/TR 14396	cv- kW	101 - 74,5
Power SAE J 1995	cv- kW	101 - 74,5
Maximum torque ISO/TR 14396	Nm	400 to 1400 rpm
Air cleaner	µm	3
Type of cooling		By water
Fan		Puller

TRANSMISSION		
Gear box		DANA
Type		Mechanical
Forward/reverse selector		Electro-hydraulic
Torque converter		DANA
Number of forward speeds		4
Number of reverse speeds		4
Angle gear box		-
Front axle		DANA
Differential		Without locking
Rear axle		DANA
Differential		Without locking
Drive wheels		4RM Permanent
Switch for 2/4 drive wheels		No
Front tyres		MICHELIN
Size		400/80-24 162A8 TUBELESS
Pressure	bar	5
Rear tyres		MICHELIN
Size		400/80-24 162A8 TUBELESS
Pressure	bar	5

ELECTRIC CIRCUIT	
Battery	12 V - 110 Ah - 900 A EN
Alternator	12 V - 85 A
Type	DENSO A115i
Starter	12 V - 3,2 kW
Type	ISKRA AZE

BRAKE CIRCUIT	
Service brake	Hydraulic power brake
Type of brake	Multidisk brake immersed in oil
Type of control	Foot-operated for the front and rear axles
Parking brake	Low pressure brake
Type of brake	Disk on gear-box output
Type of control	Electro-hydraulic

SOUND AND VIBRATION		
Level of sound pressure in the driver's cab LpA (according to standard NF EN 12053)	dB	82 (cab closed)
Level of sound power ensured in the LwA environment (according to directive 2000/14/EC modified by directive 2005/88/EC)	dB	105 (measured) 106 (ensured)
Average weighted acceleration on driver's body (according to standard NF EN 13059)	m/s2	0,985
The average weighted acceleration transmitted to the driver's hand/arm system (according to standard ISO 5349-2)	m/s2	< 2,5

HYDRAULIC CIRCUIT			
Hydraulic pump			
Type		Gear pump with flow divider on 2nd casing	
		1st casing	2nd casing
Capacity	cm3	45	27
Max. rating capacity unladen	l/mn	106	64
Flow rate at 1600 rpm	l/mn	72	44
Filtration			
Return	µm	16	16
Suction	µm	135	135
Maximum service pressure	bar	265	
Telescoping circuit	bar	190 / 265	
Lifting circuit	bar	210 / 265	
Tilt circuit	bar	280 / 190	
Stabilizers Circuit	bar	265	
Tilting corrector circuit	bar	265	
Attachment circuit	bar	265	
Steering circuit	bar	140	

HYDRAULIC MOVEMENTS		
Longitudinal stability limiter and warning device		Electronic
Lifting motions (jib retracted)		
Unladen lifting	s - m/mn	15,72 - 23,6
Laden lifting	s - m/mn	15,73 - 23,6
Unladen lowering	s - m/mn	13,33 - 27,8
Laden lowering	s - m/mn	13,36 - 27,8
Telescoping motions (jib raised)		
Unladen extending	s - m/mn	27,35 - 16,5
Laden extending	s - m/mn	27,56 - 16,7
Unladen retracting	s - m/mn	14,83 - 30,7
Laden retracting	s - m/mn	14,88 - 30,6
Tilting movements		
Unladen digging	s - °/s	5,19 - 24,3
Forward tilting unladen	s - °/s	5,07 - 24,8

SPECIFICATIONS AND WEIGHTS			
Speed of movement for lift truck in standard configuration on flat ground (except particular conditions)			
Front unladen	1	km/h	5,1
	2	km/h	8,1
	3	km/h	15,2
	4	km/h	25,7
Rear unladen	1	km/h	5,1
	2	km/h	8,1
	3	km/h	15,2
	4	km/h	25,7
Standard attachment			Extensible platform 2M25/4M 1000KG
Weight		kg	1050
Rated capacity with standard attachment		kg	1000 (including 3 persons)
- Weight of equipment allowed on board			
With 1 person		kg	920
With 2 persons		kg	840
With 3 persons		kg	760
Tipping load at maximum reach on stabilisers		kg	1950
Standard lifting height		mm	13400
Lift truck weight without attachment		kg	10745
Lift truck weight with standard attachment			
Unladen		kg	11795
At rated load		kg	12795
Weight per axle with standard attachment (transport position)			
Front unladen		kg	6903
Rear unladen		kg	4892
Front rated load		kg	8959
Rear rated load		kg	3836
Weight per axle with standard attachment (jib extended)			
Front rated load		kg	10486
Rear rated load		kg	1559
Contact pressure on the ground for the whole surface of each stabilizer at maximum load when tilting		kg/cm2	5,57
Authorised gross vehicle weight		daN	20000
Drag strain on the coupling hook			
Unladen (sliding)		daN	6235
At rated load (transmission setting)		daN	8240
Pull strain with open carrier (according to standard ISO 8313)		daN	5857

CHARACTERISTICS

MT 1840 A E3 (WITH FLOATING FORK CARRIAGE)

I.C. ENGINE		
Type		PERKINS 1104D-44TA RP52117
Fuel		Diesel
Number of cylinders		4 in line
Suction		Supercharged
Injection system		Direct
Ignition sequence		1.3.4.2
Capacity	cm3	4400
Bore and stroke	mm	105 x 127
Compression ratio		18,2/1
Nominal rating loaded	rpm	2200
Rating slow unladen	rpm	850
Max. rating unladen	rpm	2350
Power ISO/TR 14396	cv- kW	101 - 74,5
Power SAE J 1995	cv- kW	101 - 74,5
Maximum torque ISO/TR 14396	Nm	400 to 1400 rpm
Air cleaner	µm	3
Type of cooling		By water
Fan		Puller

TRANSMISSION		
Gear box		DANA
Type		Mechanical
Forward/reverse selector		Electro-hydraulic
Torque converter		DANA
Number of forward speeds		4
Number of reverse speeds		4
Angle gear box		-
Front axle		DANA
Differential		Without locking
Rear axle		DANA
Differential		Without locking
Drive wheels		4RM Permanent
Switch for 2/4 drive wheels		No
Front tyres		MICHELIN
Size		440/80-24 168A8 TUBELESS
Pressure	bar	4,5
Rear tyres		MICHELIN
Size		440/80-24 168A8 TUBELESS
Pressure	bar	4,5

ELECTRIC CIRCUIT	
Battery	12 V - 110 Ah - 900 A EN
Alternator	12 V - 85 A
Type	DENSO A115i
Starter	12 V - 3,2 kW
Type	ISKRA AZE

BRAKE CIRCUIT	
Service brake	Hydraulic power brake
Type of brake	Multidisk brake immersed in oil
Type of control	Foot-operated for the front and rear axles
Parking brake	Low pressure brake
Type of brake	Disk on gear-box output
Type of control	Electro-hydraulic

SOUND AND VIBRATION		
Level of sound pressure in the driver's cab LpA (according to standard NF EN 12053)	dB	82 (cab closed)
Level of sound power ensured in the LwA environment (according to directive 2000/14/EC modified by directive 2005/88/EC)	dB	105 (measured) 106 (ensured)
Average weighted acceleration on driver's body (according to standard NF EN 13059)	m/s2	0,985
The average weighted acceleration transmitted to the driver's hand/arm system (according to standard ISO 5349-2)	m/s2	< 2,5

HYDRAULIC CIRCUIT			
Hydraulic pump			
Type		Gear pump with flow divider on 2nd casing	
		1st casing	2nd casing
Capacity	cm3	45	27
Max. rating capacity unladen	l/mn	106	64
Flow rate at 1600 rpm	l/mn	72	44
Filtration			
Return	µm	16	16
Suction	µm	135	135
Maximum service pressure	bar	265	
Telescoping circuit	bar	240 / 265	
Lifting circuit	bar	210 / 265	
Tilt circuit	bar	280 / 190	
Stabilizers Circuit	bar	265	
Tilting corrector circuit	bar	265	
Attachment circuit	bar	265	
Steering circuit	bar	140	

HYDRAULIC MOVEMENTS		
Longitudinal stability limiter and warning device		Electronic
Lifting motions (jib retracted)		
Unladen lifting	s - m/mn	18,04 - 21,5
Laden lifting	s - m/mn	17,97 - 21,5
Unladen lowering	s - m/mn	14,36 - 26,9
Laden lowering	s - m/mn	14,27 - 27,1
Telescoping motions (jib raised)		
Unladen extending	s - m/mn	24,99 - 8,8
Laden extending	s - m/mn	25,39 - 9
Unladen retracting	s - m/mn	18,56 - 12,1
Laden retracting	s - m/mn	17,87 - 12,5
Tilting movements		
Unladen digging	s - °/s	5,07 - 24,8
Forward tilting unladen	s - °/s	7,31 - 17,2

SPECIFICATIONS AND WEIGHTS			
Speed of movement for lift truck in standard configuration on flat ground (except particular conditions)			
Front unladen	1	km/h	5,4
	2	km/h	8,5
	3	km/h	16
	4	km/h	27,1
Rear unladen	1	km/h	5,4
	2	km/h	8,5
	3	km/h	16
	4	km/h	27,1
Standard attachment			TFF 45 MT1040
Weight with forks		kg	228
Weight of forks (each one)		kg	71
Rated capacity with standard attachment		kg	4000
Tipping load at maximum reach on stabilisers		kg	1110
Distance from the centre of gravity from the load to the lug of the forks		mm	500
Standard lifting height		mm	17530
Lift truck weight without attachment		kg	11260
Lift truck weight with standard attachment			
Unladen		kg	11630
At rated load		kg	15630
Weight per axle with standard attachment (transport position)			
Front unladen		kg	5480
Rear unladen		kg	6150
Front rated load		kg	12930
Rear rated load		kg	2700
Weight per axle with standard attachment (jib extended)			
Front rated load		kg	11450
Rear rated load		kg	580
Contact pressure on the ground for the whole surface of each stabilizer at maximum load when tilting		kg/cm2	4,97
Authorised gross vehicle weight		daN	20000
Drag strain on the coupling hook			
Unladen (sliding)		daN	7380
At rated load (transmission setting)		daN	10023
Pull strain with open carrier (according to standard ISO 8313)		daN	8359

CHARACTERISTICS

MT 1840 A E3 (WITH EXTENSIBLE PLATFORM 2M25/4M 1000KG)

I.C. ENGINE		
Type		PERKINS 1104D-44TA RP52117
Fuel		Diesel
Number of cylinders		4 in line
Suction		Supercharged
Injection system		Direct
Ignition sequence		1.3.4.2
Capacity	cm3	4400
Bore and stroke	mm	105 x 127
Compression ratio		18,2/1
Nominal rating loaded	rpm	2200
Rating slow unladen	rpm	850
Max. rating unladen	rpm	2350
Power ISO/TR 14396	cv- kW	101 - 74,5
Power SAE J 1995	cv- kW	101 - 74,5
Maximum torque ISO/TR 14396	Nm	400 to 1400 rpm
Air cleaner	µm	3
Type of cooling		By water
Fan		Puller

TRANSMISSION		
Gear box		DANA
Type		Mechanical
Forward/reverse selector		Electro-hydraulic
Torque converter		DANA
Number of forward speeds		4
Number of reverse speeds		4
Angle gear box		-
Front axle		DANA
Differential		Without locking
Rear axle		DANA
Differential		Without locking
Drive wheels		4RM Permanent
Switch for 2/4 drive wheels		No
Front tyres		MICHELIN
Size		440/80-24 168A8 TUBELESS
Pressure	bar	4,5
Rear tyres		MICHELIN
Size		440/80-24 168A8 TUBELESS
Pressure	bar	4,5

ELECTRIC CIRCUIT	
Battery	12 V - 110 Ah - 900 A EN
Alternator	12 V - 85 A
Type	DENSO A115i
Starter	12 V - 3,2 kW
Type	ISKRA AZE

BRAKE CIRCUIT	
Service brake	Hydraulic power brake
Type of brake	Multidisk brake immersed in oil
Type of control	Foot-operated for the front and rear axles
Parking brake	Low pressure brake
Type of brake	Disk on gear-box output
Type of control	Electro-hydraulic

SOUND AND VIBRATION		
Level of sound pressure in the driver's cab LpA (according to standard NF EN 12053)	dB	82 (cab closed)
Level of sound power ensured in the LwA environment (according to directive 2000/14/EC modified by directive 2005/88/EC)	dB	105 (measured) 106 (ensured)
Average weighted acceleration on driver's body (according to standard NF EN 13059)	m/s2	0,985
The average weighted acceleration transmitted to the driver's hand/arm system (according to standard ISO 5349-2)	m/s2	< 2,5

HYDRAULIC CIRCUIT			
Hydraulic pump			
Type		Gear pump with flow divider on 2nd casing	
		1st casing	2nd casing
Capacity	cm3	45	27
Max. rating capacity unladen	l/mn	106	64
Flow rate at 1600 rpm	l/mn	72	44
Filtration			
Return	µm	16	16
Suction	µm	135	135
Maximum service pressure	bar	265	
Telescoping circuit	bar	240 / 265	
Lifting circuit	bar	210 / 265	
Tilt circuit	bar	280 / 190	
Stabilizers Circuit	bar	265	
Tilting corrector circuit	bar	265	
Attachment circuit	bar	265	
Steering circuit	bar	140	

HYDRAULIC MOVEMENTS		
Longitudinal stability limiter and warning device		Electronic
Lifting motions (jib retracted)		
Unladen lifting	s - m/mn	18,04 - 21,5
Laden lifting	s - m/mn	17,97 - 21,5
Unladen lowering	s - m/mn	14,36 - 26,9
Laden lowering	s - m/mn	14,27 - 27,1
Telescoping motions (jib raised)		
Unladen extending	s - m/mn	24,99 - 8,8
Laden extending	s - m/mn	25,39 - 9
Unladen retracting	s - m/mn	18,56 - 12,1
Laden retracting	s - m/mn	17,87 - 12,5
Tilting movements		
Unladen digging	s - °/s	5,07 - 24,8
Forward tilting unladen	s - °/s	7,31 - 17,2

SPECIFICATIONS AND WEIGHTS			
Speed of movement for lift truck in standard configuration on flat ground (except particular conditions)			
Front unladen	1	km/h	5,4
	2	km/h	8,5
	3	km/h	16
	4	km/h	27,1
Rear unladen	1	km/h	5,4
	2	km/h	8,5
	3	km/h	16
	4	km/h	27,1
Standard attachment			Extensible platform 2M25/4M 1000KG
Weight		kg	1050
Rated capacity with standard attachment		kg	1000 (including 3 persons)
- Weight of equipment allowed on board			
With 1 person		kg	920
With 2 persons		kg	840
With 3 persons		kg	760
Tipping load at maximum reach on stabilisers		kg	1110
Standard lifting height		mm	17300
Lift truck weight without attachment		kg	11260
Lift truck weight with standard attachment			
Unladen		kg	12310
At rated load		kg	13310
Weight per axle with standard attachment (transport position)			
Front unladen		kg	7018
Rear unladen		kg	5292
Front rated load		kg	9074
Rear rated load		kg	4236
Weight per axle with standard attachment (jib extended)			
Front rated load		kg	10842
Rear rated load		kg	1468
Contact pressure on the ground for the whole surface of each stabilizer at maximum load when tilting		kg/cm2	4,97
Authorised gross vehicle weight		daN	20000
Drag strain on the coupling hook			
Unladen (sliding)		daN	7380
At rated load (transmission setting)		daN	10023
Pull strain with open carrier (according to standard ISO 8313)		daN	8359

FRONT AND REAR TIRES

MT 1440 A E3 (WITH FLOATING FORK CARRIAGE)		PRESSURE (bar)	TYRE LOAD (kg)			
			FRONT UNLADEN	FRONT LADEN	REAR UNLADEN	REAR LADEN
DUNLOP	440/80-24 T37 158B TUBELESS	4,5	2700	6300	2900	1250
GALAXY	15.5-25 16PR GIRAFFE L2	5,2				
MICHELIN	400/80-24 162A8 TUBELESS	5				
MITAS	15.5-25 12PR EM-20 TUBELESS	4,6				

MT 1840 A E3 (WITH FLOATING FORK CARRIAGE)		PRESSURE (bar)	TYRE LOAD (kg)			
			FRONT UNLADEN	FRONT LADEN	REAR UNLADEN	REAR LADEN
DUNLOP	440/80-24 T37 158B TUBELESS	4,5	2750	6450	3050	1350
GALAXY	15.5-25 16PR GIRAFFE L2	5,2				
MICHELIN	440/80-24 168A8 TUBELESS	4,5				
MITAS	15.5-25 12PR EM-20 TUBELESS	4,6				

		PRESSURE (bar)	LOAD (kg)	PRESSURE ON THE CONTACT SURFACE (kg/cm2)		AREA OF THE CONTACT SURFACE (cm2)	
				HARD SOIL	LOOSE SOIL	HARD SOIL	LOOSE SOIL
DUNLOP	440/80-24 T37 158B TUBELESS	4,5	1250	6,84	1,89	180	650
			1350	6,99	1,84	190	686
			2700	8,71	2,41	310	1120
			2750	8,73	2,42	315	1135
			2900	8,92	2,47	325	1173
			3050	8,97	2,50	340	1220
			6300	12,86	3,54	490	1780
			6450	12,97	3,58	498	1803
GALAXY	15.5-25 16PR GIRAFFE L2	5,2	1250				
			1350				
			2700				
			2750				
			2900				
			3050				
			6300				
			6450				
MICHELIN	400/80-24 162A8 TUBELESS	5	1250				
			2700				
			2900				
			6300				
	440/80-24 168A8 TUBELESS	4,5	1350				
			2750				
			3050				
			6450				
MITAS	15.5-25 12PR EM-20 TUBELESS	4,6	1250				
			1350				
			2700				
			2750				
			2900				
			3050				
			6300				
			6450				

MT 1440 A E3 (WITH EXTENSIBLE PLATFORM 2M25/4M 1000KG)		PRESSURE (bar)	TYRE LOAD (kg)			
			FRONT UNLADEN	FRONT LADEN	REAR UNLADEN	REAR LADEN
DUNLOP	440/80-24 T37 158B TUBELESS	4,5	3450	4500	2450	1900
GALAXY	15.5-25 16PR GIRAFFE L2	5,2				
MICHELIN	400/80-24 162A8 TUBELESS	5				
MITAS	15.5-25 12PR EM-20 TUBELESS	4,6				

MT 1840 A E3 (WITH EXTENSIBLE PLATFORM 2M25/4M 1000KG)		PRESSURE (bar)	TYRE LOAD (kg)			
			FRONT UNLADEN	FRONT LADEN	REAR UNLADEN	REAR LADEN
DUNLOP	440/80-24 T37 158B TUBELESS	4,5	3500	4550	2650	2100
GALAXY	15.5-25 16PR GIRAFFE L2	5,2				
MICHELIN	440/80-24 168A8 TUBELESS	4,5				
MITAS	15.5-25 12PR EM-20 TUBELESS	4,6				

		PRESSURE (bar)	LOAD (kg)	PRESSURE ON THE CONTACT SURFACE (kg/cm2)		AREA OF THE CONTACT SURFACE (cm2)	
				HARD SOIL	LOOSE SOIL	HARD SOIL	LOOSE SOIL
DUNLOP	440/80-24 T37 158B TUBELESS	4,5	1900	7,79	2,16	243	877
			2100	8,03	2,23	261	939
			2450	8,45	2,36	290	1040
			2650	8,69	2,40	305	1105
			3450	9,54	2,64	357	1293
			3500	9,60	2,65	360	1302
			4500	10,80	2,98	409	1481
			4550	10,86	3,00	411	1490
GALAXY	15.5-25 16PR GIRAFFE L2	5,2	1900				
			2100				
			2450				
			2650				
			3450				
			3500				
			4500				
			4550				
MICHELIN	400/80-24 162A8 TUBELESS	5	1900				
			2450				
			3450				
			4500				
	440/80-24 168A8 TUBELESS	4,5	2100				
			2650				
			3500				
			4550				
MITAS	15.5-25 12PR EM-20 TUBELESS	4,6	1900				
			2100				
			2450				
			2650				
			3450				
			3500				
			4500				
			4550				

DIMENSIONS AND LOAD CHART

MT 1440 A E3 (WITH FLOATING FORK CARRIAGE)

A	mm	1200
B	mm	3070
C	mm	1905
C1	mm	1790
D	mm	6135
D1	mm	6020
D2	mm	4872
E	mm	7335
F	mm	1960
F1	mm	1960
G	mm	384
G1	mm	367
G2	mm	380
G3	mm	355
H	°	9
H1	°	9
I	mm	1160
J	mm	892
K	mm	1040
L	mm	50
N	mm	1855
O	mm	125
P2	°	34
P3	°	33
R	mm	3779
S	mm	8615
T	mm	4183
U1	mm	2452
U2	mm	2640
V	mm	5468
V1	mm	1285
V2	mm	3975
W	mm	2351
W1	mm	3793
W2	mm	1134
W3	mm	2422
Y	°	12
Z	°	114

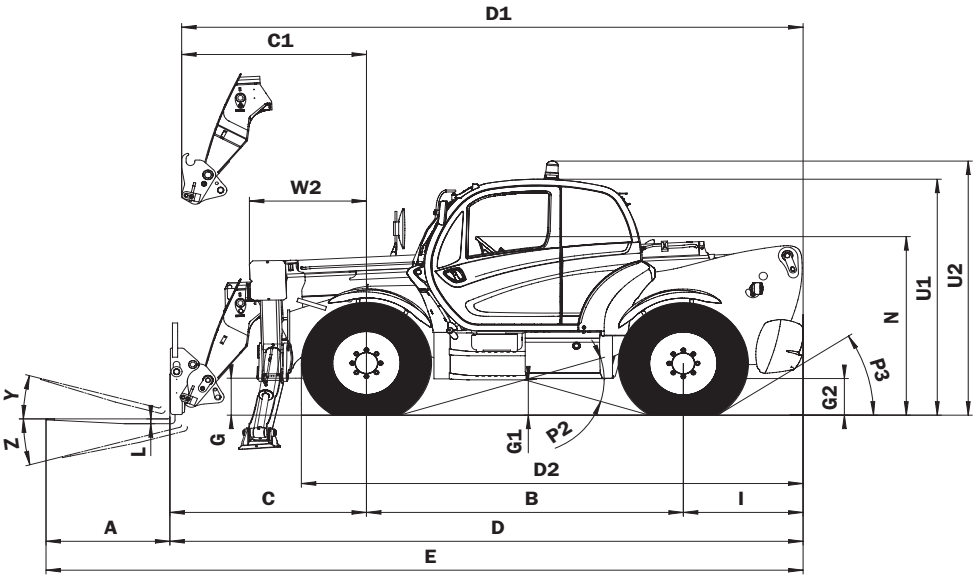

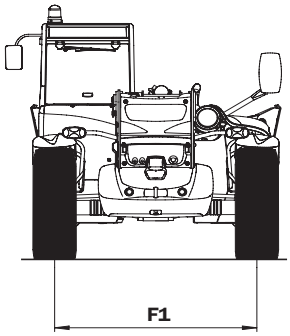

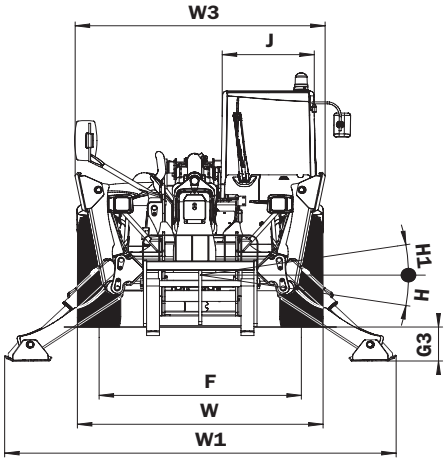

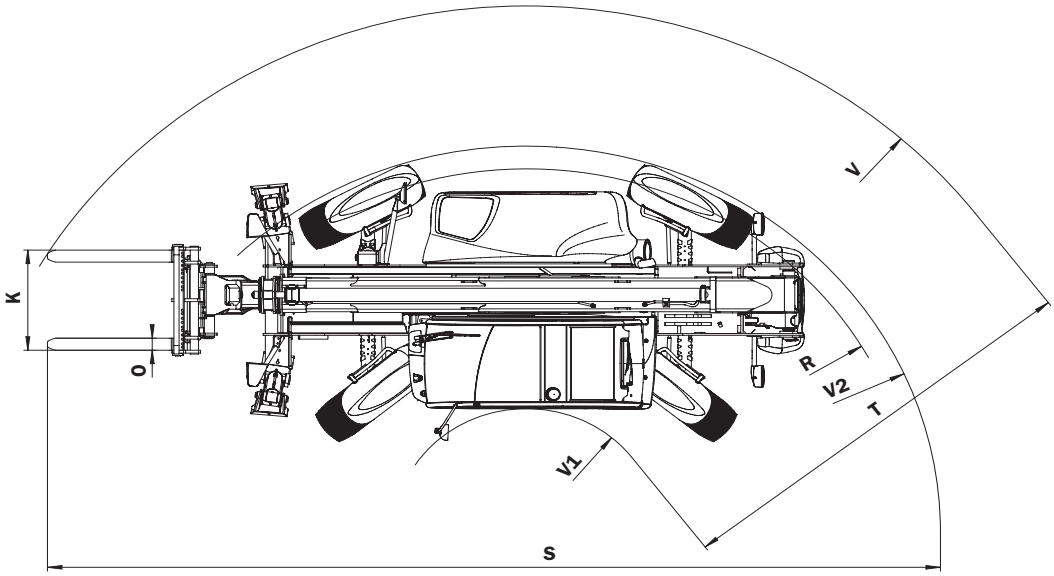

SUIVANT NORME EN 1459 annexe B.

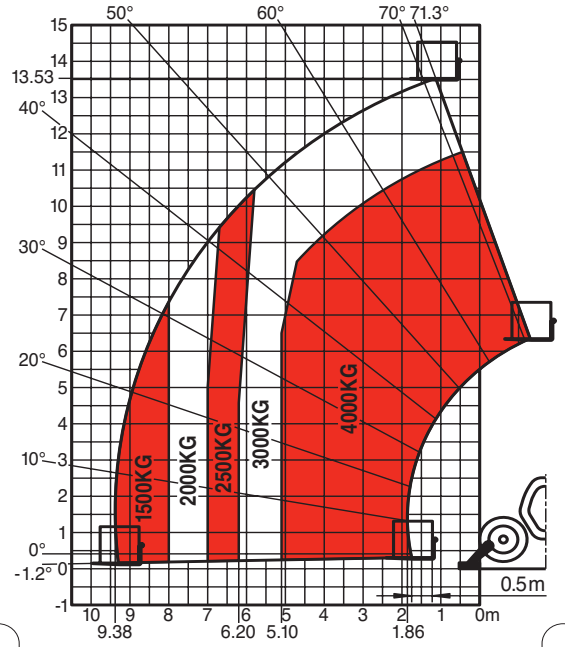

MT 1440

N°261552

N°261549

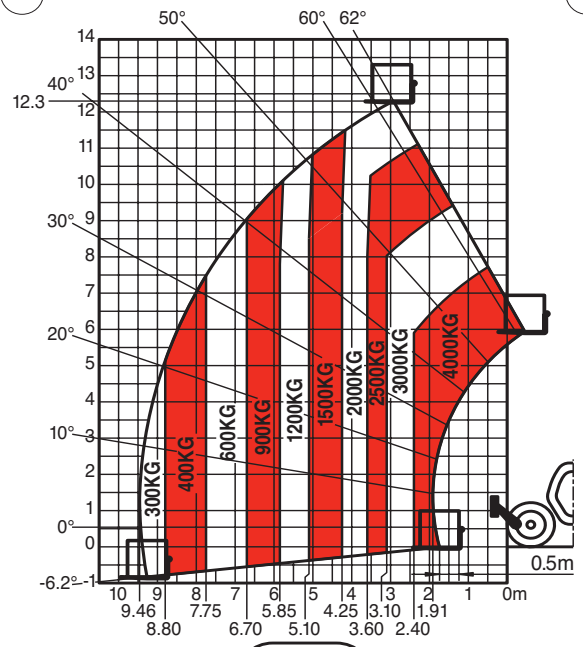

MT 1440

SUIVANT NORME EN 1459 annexe B.

DIMENSIONS AND LOAD CHART

MT 1440 A E3 (WITH EXTENSIBLE PLATFORM 2M25/4M 1000KG)

A	mm	1200
B	mm	3070
C	mm	4235
C1	mm	1790
C2	mm	887
D1	mm	6020
D2	mm	4872
E	mm	8465
F	mm	1960
F1	mm	1960
G	mm	384
G1	mm	367
G2	mm	380
G3	mm	355
H	°	9
H1	°	9
I	mm	1160
J	mm	892
K	mm	2250/4000
L	mm	1300
N	mm	1855
P2	°	34
P3	°	33
R	mm	3779
S	mm	10945
T	mm	5977
U1	mm	2452
U2	mm	2640
V	mm	7262
V1	mm	1285
V2	mm	3975
W	mm	2351
W1	mm	3793
W2	mm	1134
W3	mm	2422
Y	°	90
Z	°	90

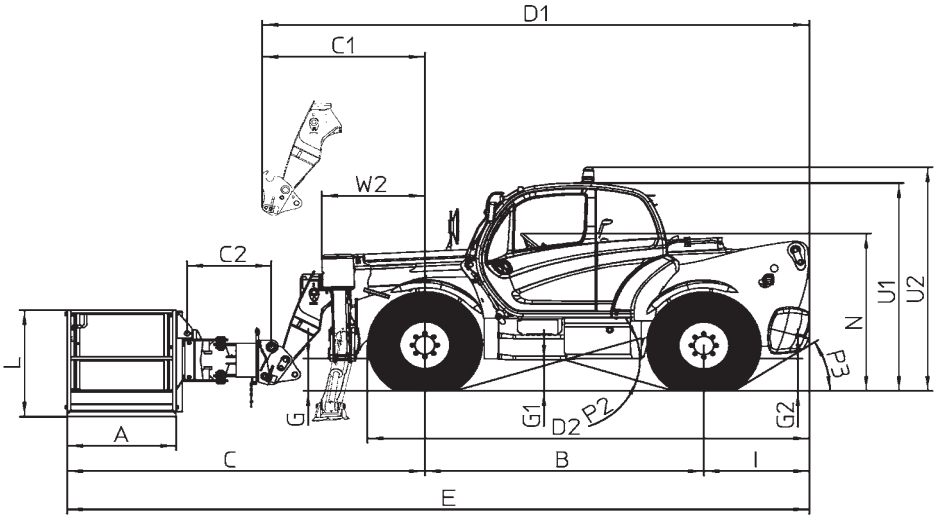

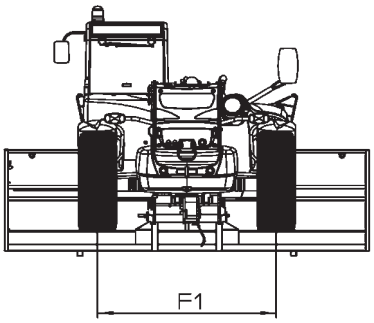

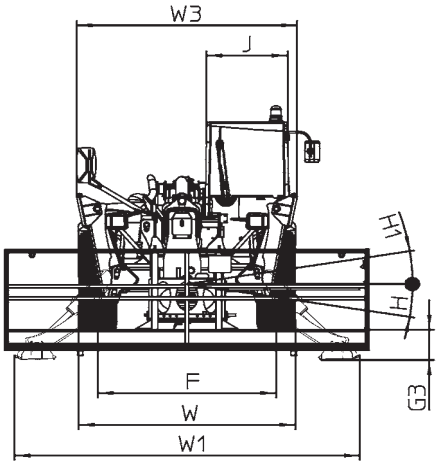

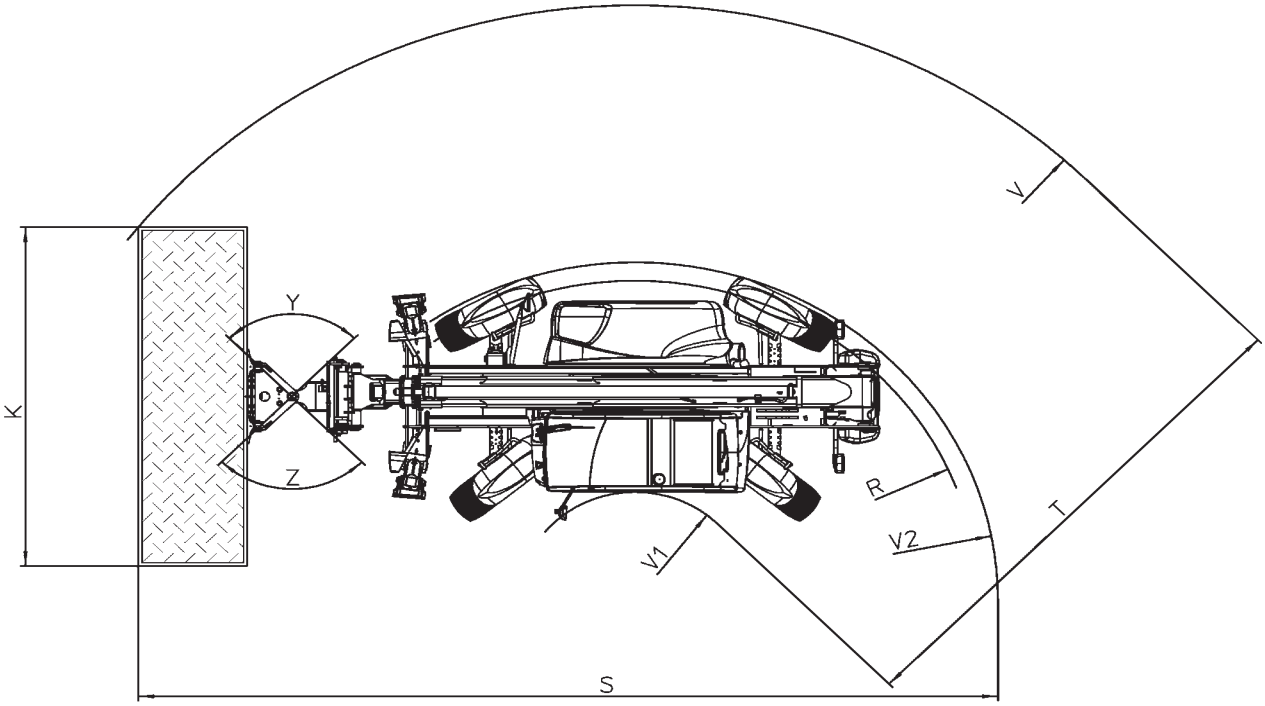

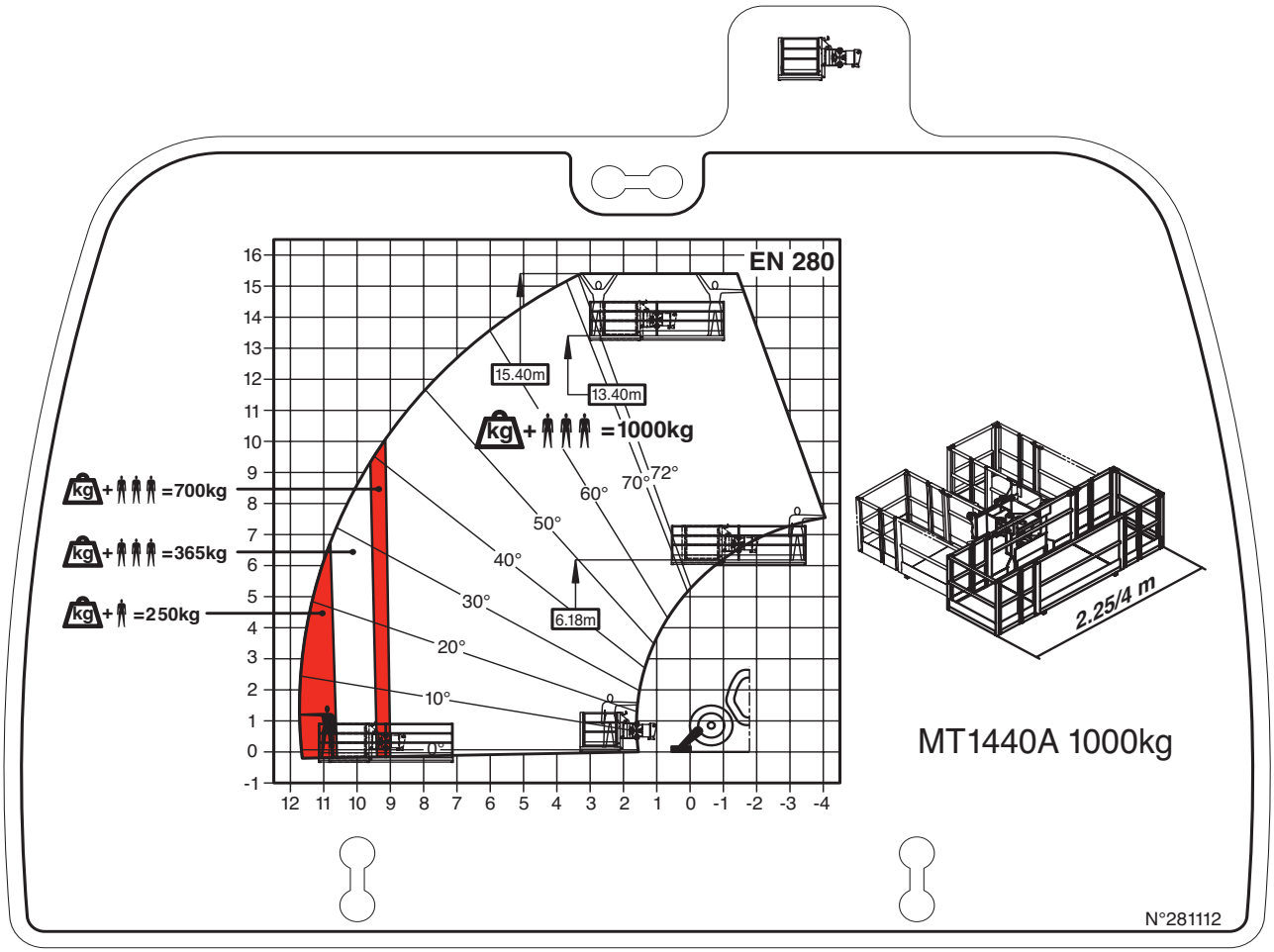
EN 280
15.40m
13.40m
6.18m
kg + =1000kg
kg + =700kg
kg + =365kg
kg + =250kg
0°
10°
20°
30°
40°
50°
60°
70°
72°
2.25/4 m
MT1440A 1000kg
N°281112

DIMENSIONS AND LOAD CHART

MT 1840 A E3 (WITH FLOATING FORK CARRIAGE)

A	mm	1200
B	mm	3070
C	mm	2044
C1	mm	1929
D	mm	6274
D1	mm	6159
D2	mm	4894
E	mm	7474
F	mm	1960
F1	mm	1960
G	mm	437
G1	mm	420
G2	mm	433
G3	mm	302
H	°	9
H1	°	9
I	mm	1160
J	mm	892
K	mm	1040
L	mm	50
N	mm	1908
O	mm	125
P2	°	37
P3	°	34
R	mm	3779
S	mm	8788
T	mm	4307
U1	mm	2505
U2	mm	2693
V	mm	5592
V1	mm	1285
V2	mm	4009
W	mm	2420
W1	mm	3793
W2	mm	1134
W3	mm	2422
Y	°	12
Z	°	114

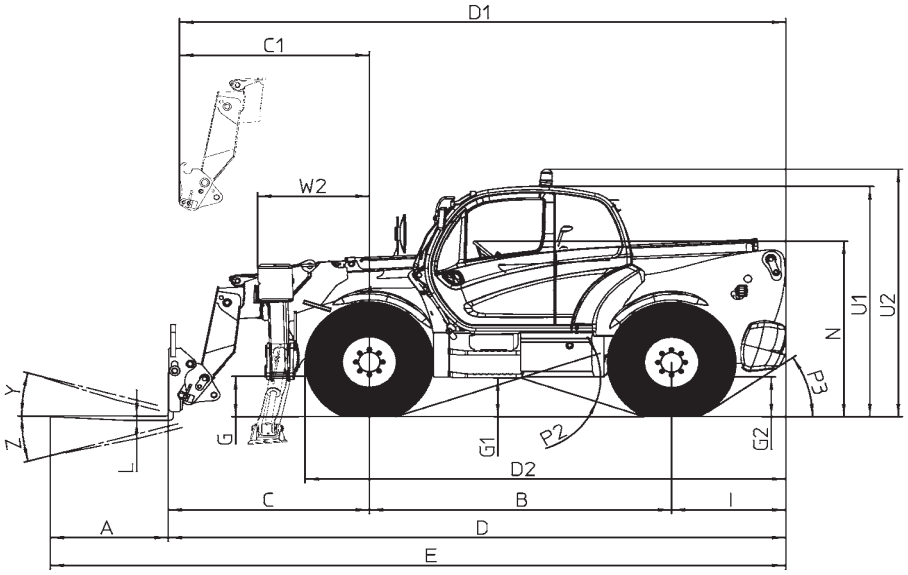

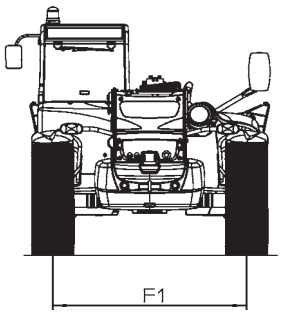

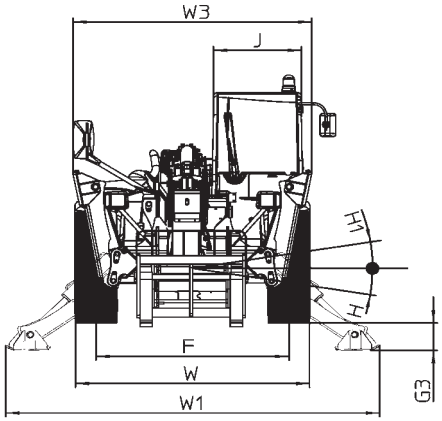

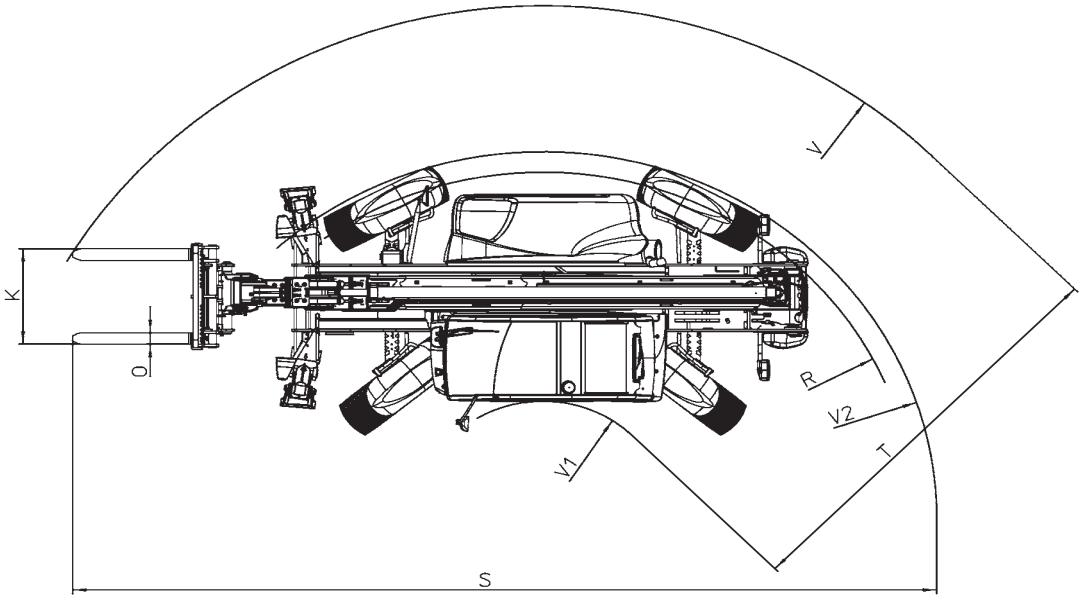

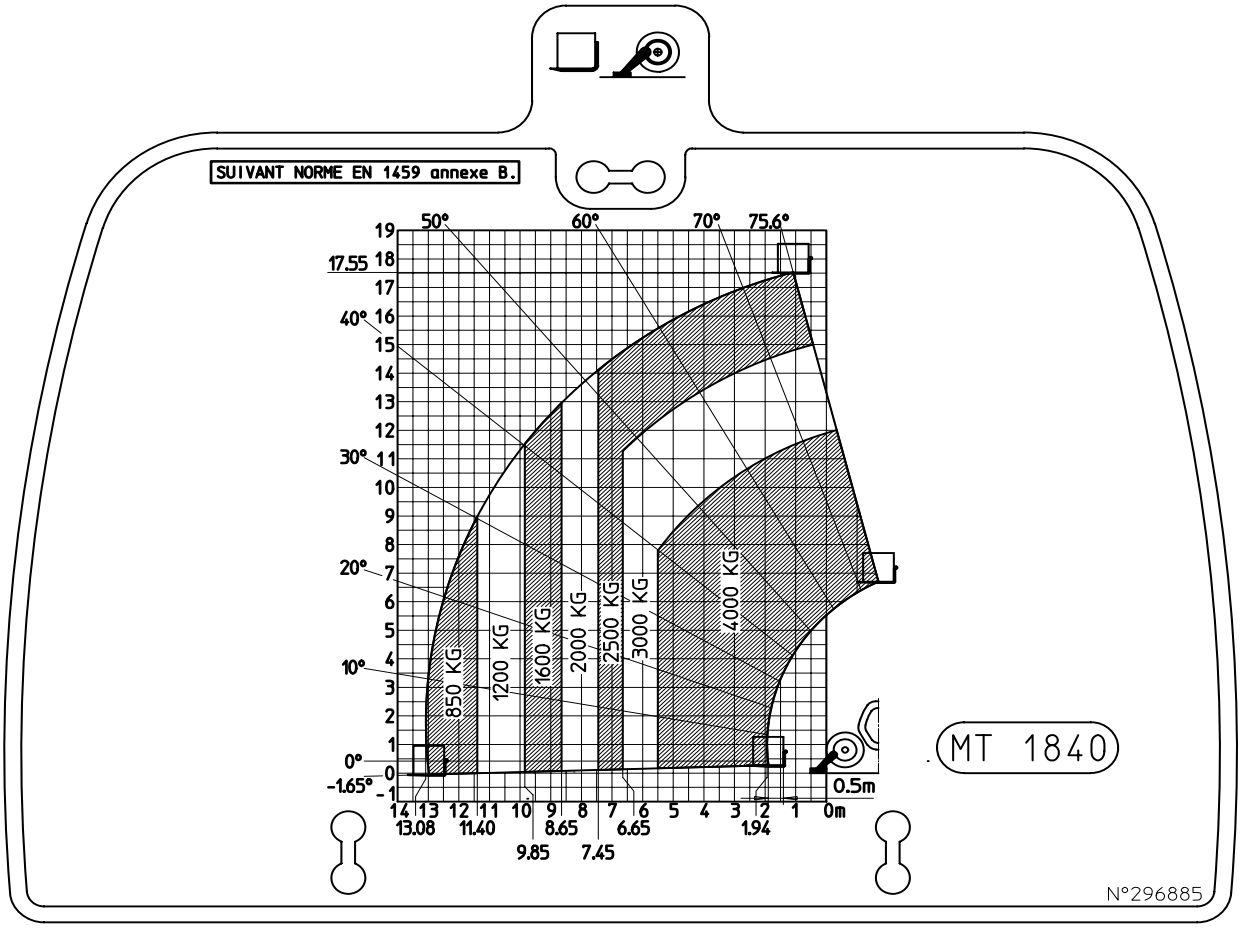
SUIVANT NORME EN 1459 annexe B.
50°
60°
70°
75.6°
17.55
40°
30°
20°
10°
0°
-1.65°
850 KG
1200 KG
1600 KG
2000 KG
2500 KG
3000 KG
4000 KG
0.5m
13.08
11.40
9.85
8.65
7.45
6.65
1.94
0m
MT 1840
N°296885

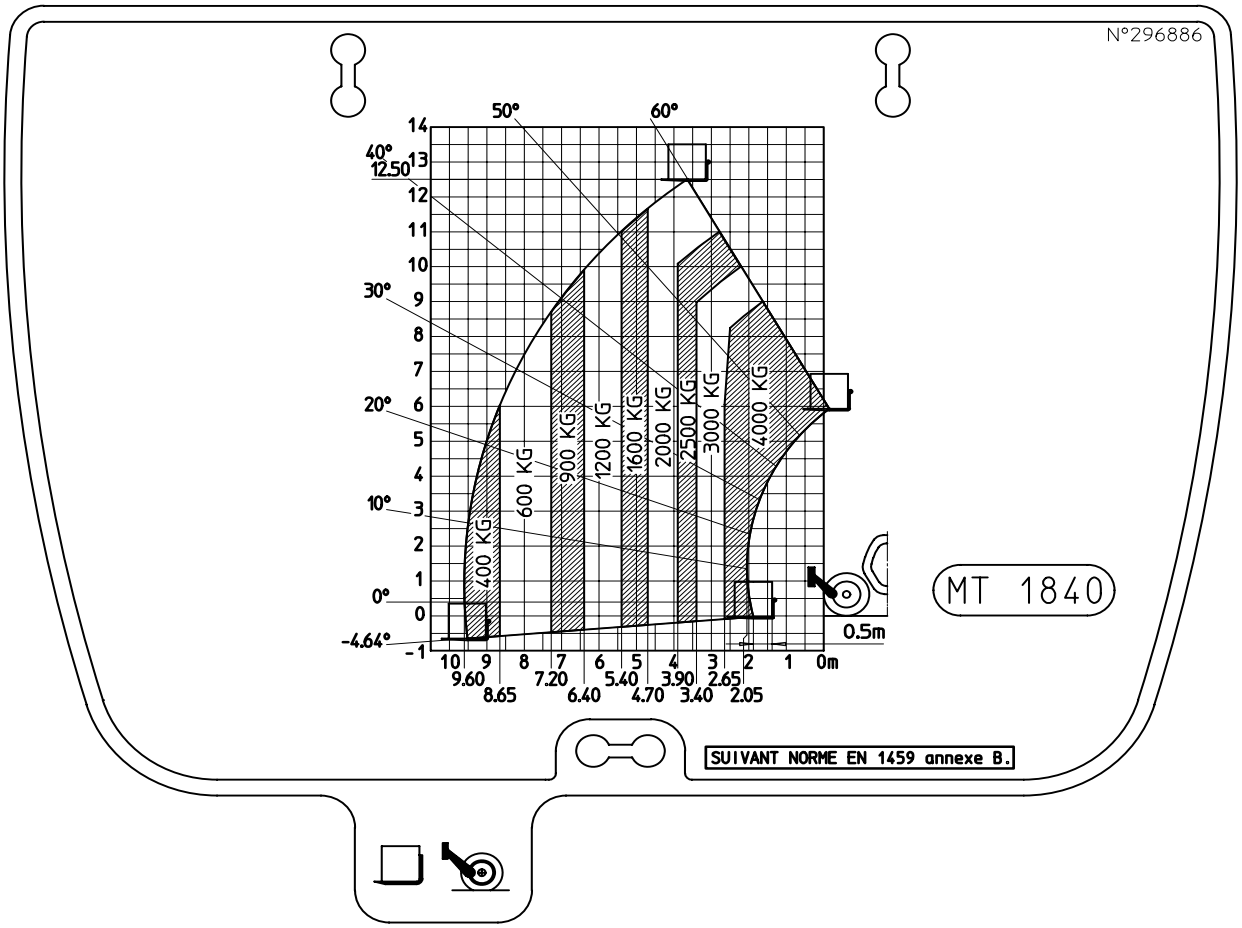
N°296886
50°
60°
40°
12.50
30°
20°
10°
0°
-4.64°
400 KG
600 KG
900 KG
1200 KG
1600 KG
2000 KG
2500 KG
3000 KG
4000 KG
0.5m
9.60
8.65
7.20
6.40
5.40
4.70
3.90
3.40
2.65
2.05
0m
MT 1840
SUIVANT NORME EN 1459 annexe B.

DIMENSIONS AND LOAD CHART

MT 1840 A E3 (WITH EXTENSIBLE PLATFORM 2M25/4M 1000KG)

A	mm	1200
B	mm	3070
C	mm	4235
C1	mm	1929
C2	mm	887
D1	mm	6159
D2	mm	4894
E	mm	8465
F	mm	1960
F1	mm	1960
G	mm	437
G1	mm	420
G2	mm	433
G3	mm	302
H	°	9
H1	°	9
I	mm	1160
J	mm	892
K	mm	2250/4000
L	mm	1300
N	mm	1908
P2	°	37
P3	°	34
R	mm	3779
S	mm	9779
T	mm	6088
U1	mm	2505
U2	mm	2693
V	mm	7373
V1	mm	1285
V2	mm	4009
W	mm	2420
W1	mm	3793
W2	mm	1134
W3	mm	2422
Y	°	90
Z	°	90

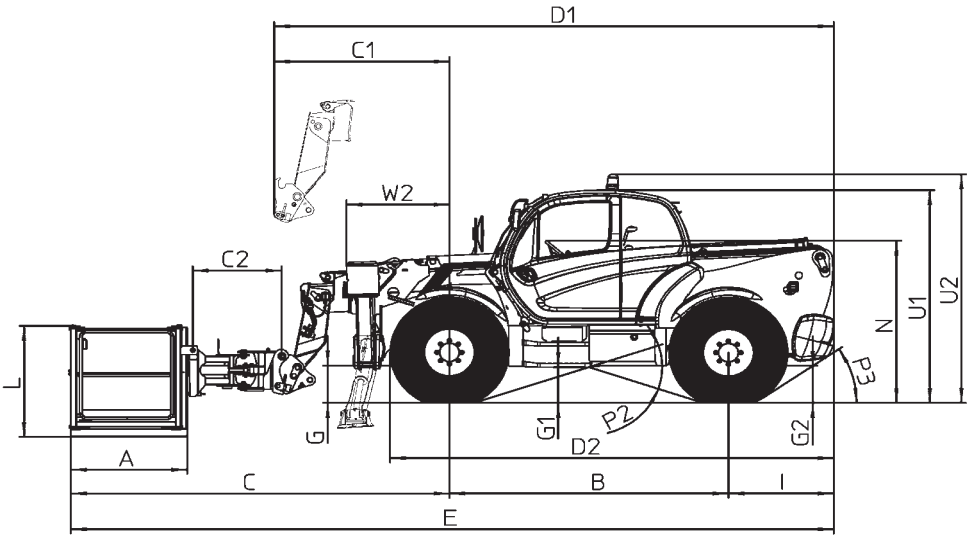

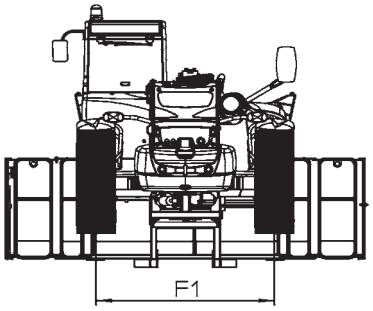

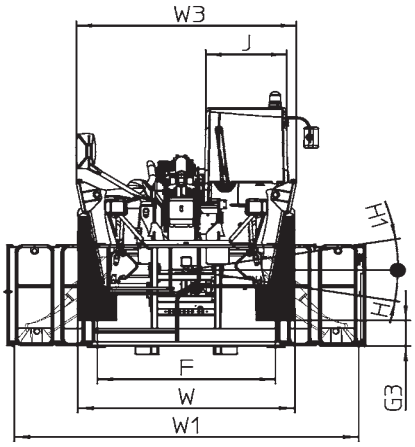

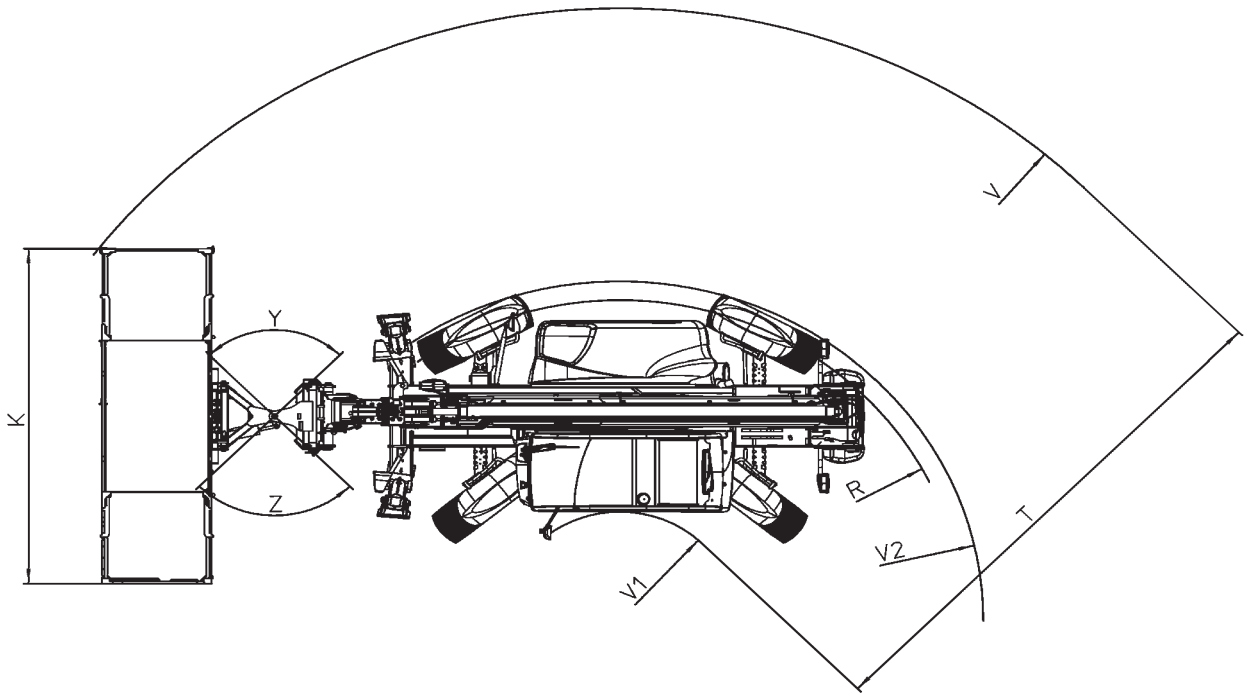

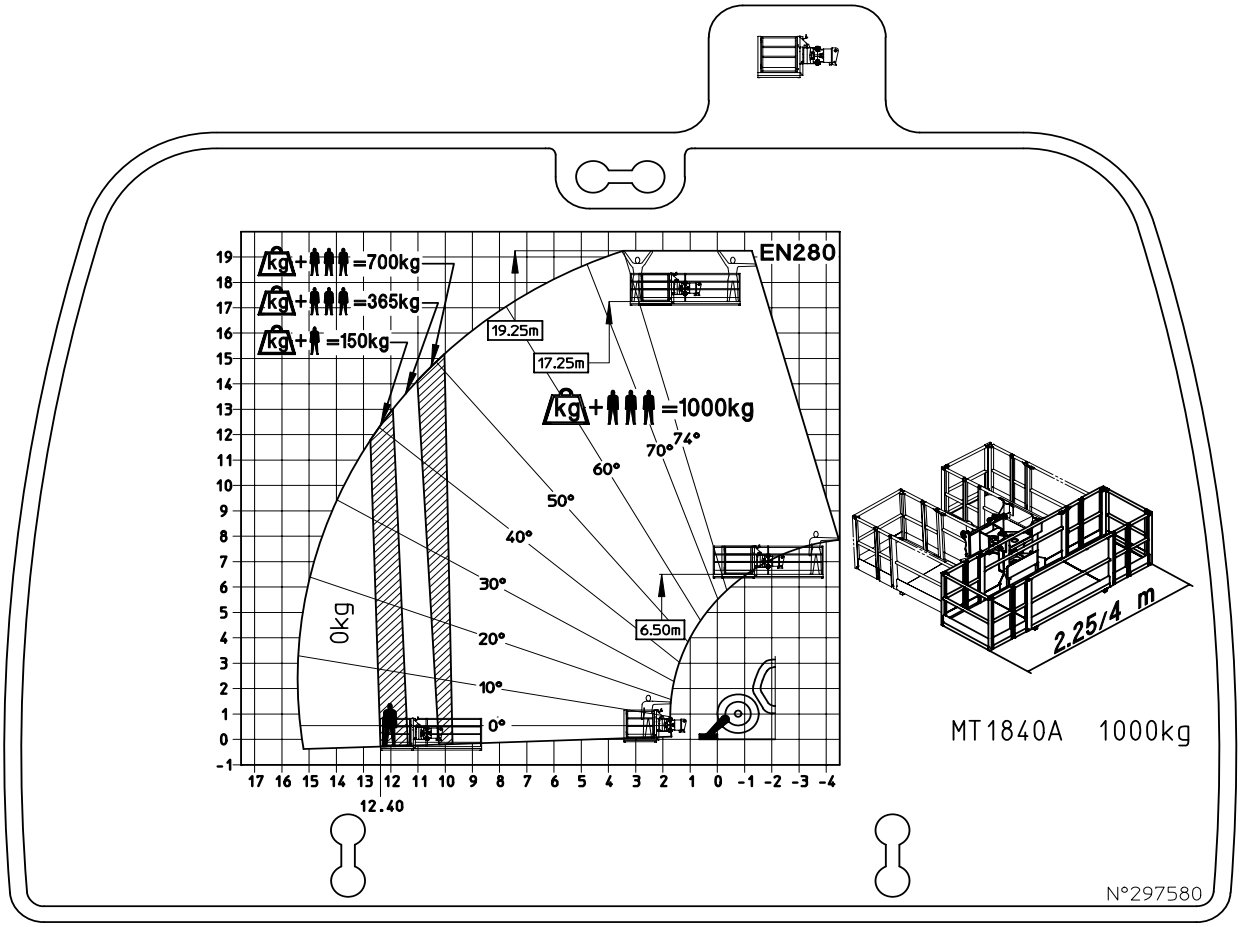
EN280
=700kg
=365kg
=150kg
=1000kg
19.25m
17.25m
6.50m
0kg
0°
10°
20°
30°
40°
50°
60°
70°
74°
12.40
2.25/4 m
MT1840A 1000kg
N°297580

INSTRUMENTS AND CONTROLS

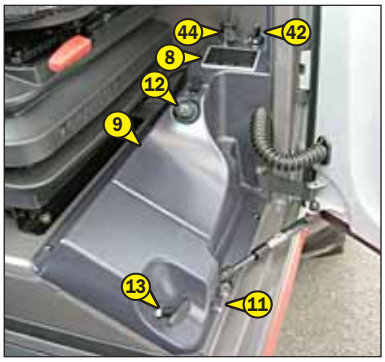

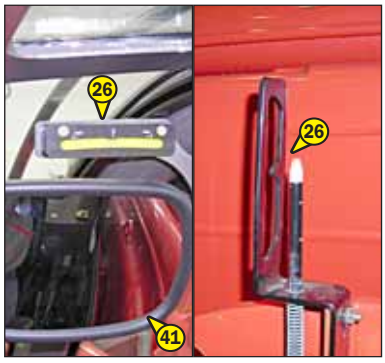

DESCRIPTION

1 - DRIVER'S SEAT
2 - SAFETY BELT
3 - IGNITION SWITCH
4 - EMERGENCY STOP BUTTON
5 - BATTERY CUT-OFF
6 - MAN-MACHINE INTERFACE (MMI)
- **6A - DRIVER PRESENCE**
- **6B - INSTRUMENT CONTROL PANEL**
- **6C - PANEL FOR BUTTONS AND KEYBOARD**
- **6D - SCREEN DISPLAY**

7 - LONGITUDINAL STABILITY LIMITER AND WARNING DEVICE
8 - SWITCHES
9 - FUSES AND RELAYS IN THE CAB
10 - FUSES AND RELAYS UNDER THE ENGINE HOOD
11 - DOOR PRESENCE SENSORS
12 - LIGHTER
13 - HANDLE FOR OPENING ENGINE HOOD
14 - SWITCH FOR LIGHTING, HORN AND INDICATORS
15 - FRONT AND REAR WINDSCREEN WIPER SWITCH
16 - FUNCTION FILES
17 - HYDRAULIC CONTROLS
18 - ACCELERATOR PEDAL
19 - SERVICE BRAKE PEDAL
20 - FORWARD/NEUTRAL/REVERSE GEAR SELECTION
21 - GEAR LEVER
22 - STEERING SELECTION
23 - HEATER CONTROL
23 - AIR CONDITIONING CONTROLS (AIR CONDITIONING OPTION)
24 - HEATING VENTS
25 - DEMIST VENTS
26 - LEVEL INDICATORS
27 - DOOR OPEN LEVER
28 - DOOR CLOSE HANDLE
29 - WINDOW REGULATOR SWITCH
30 - SIDE STORAGE SPACE
31 - ROOF LIGHT
32 - HANDLE FOR REAR WINDOW OPENING
33 - HANDLE FOR REAR WINDOW CLOSING
34 - STEERING WHEEL ADJUSTMENT LEVER
35 - DOCUMENT HOLDER NET
36 - STORAGE COMPARTMENT
37 - ASHTRAY
38 - FRONT LIGHTS (NOT ILLUSTRATED)
39 - REAR LIGHTS (NOT ILLUSTRATED)
40 - FLASHING LIGHT (NOT ILLUSTRATED)
41 - INSIDE REAR-VIEW MIRROR (OPTION)
42 - TRUCK/PLATFORM SELECTOR SWITCH
43 - CONTROL CONSOLE
44 - RESCUE SWITCH
45 - DEAD-MAN BUTTON IN RESCUE MODE
46 - RADIO-CONTROL (OPTION)
- 46A - RADIO-CONTROL TRANSMITTER (OPTION)
- 46B - RADIO-CONTROL RECEIVER (OPTION)
- 46C - RADIO-CONTROL BATTERY (OPTION)

NOTE: All the terms such as: RIGHT, LEFT, FRONT, REAR are meant for an observer seated on driver's seat and looking in front of him.

1 - DRIVER'S SEAT

DESIGNED FOR MAXIMUM COMFORT, THIS SEAT CAN BE ADJUSTED AS FOLLOWS.

WEIGHT ADJUSTMENT (FIG. A)
It is advised that the weight be adjusted when the driver is not sitting in the cab.
- Refer to graduation 1 of the seat.
- Turn handle 2 depending on the driver's weight.

NOTE: To avoid any health problems, it is recommended that the weight should be checked and adjusted before starting up the lift truck.

SEAT HEIGHT ADJUSTMENT (FIG. B)
Raise the seat to the desired position, until you hear the ratchet click. If you raise the seat above the last notch (stop), the seat drops down to the lowest position.

SEAT BACK-REST ANGLE ADJUSTMENT (FIG. C)
The back-rest angle of the seat may be adjusted to suit the individual.
- Press the left-hand button while pushing on the seat or relaxing pressure on the seat to find a comfortable position.

SEAT DEPTH ADJUSTMENT (FIG. D)
The depth of the seat may be adjusted to suit the individual.
- Press the right-hand button while raising or lowering the seat to find the desired position.

EXTENDING THE HEAD-REST (FIG. E)
- The height of the back-rest can be adjusted by pulling it upwards (the notches will click) up to the stop.
- The head-rest can be removed by applying sufficient pressure to pull it off the stop.

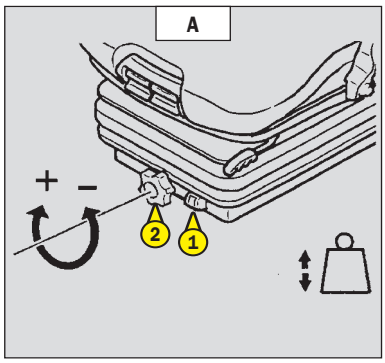

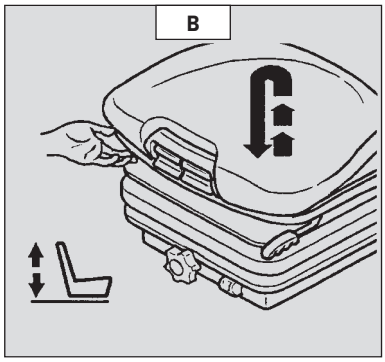

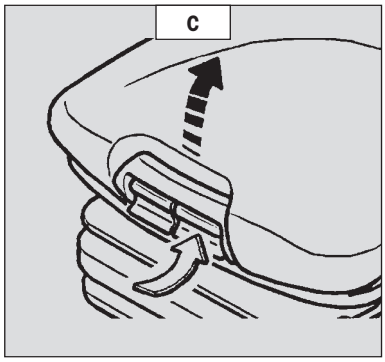

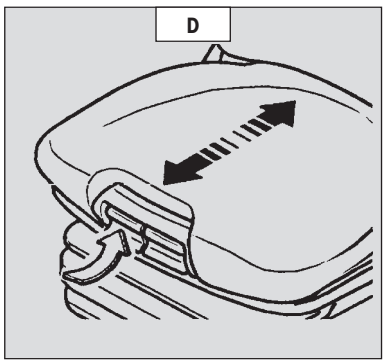

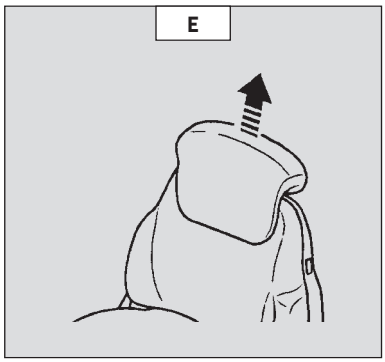

LUMBAR ADJUSTMENT (FIG. F)
This increases the comfort of the seat and the driver's freedom of movement.
- Turn the handle either left or right to adjust the height or depth of the lumbar support.

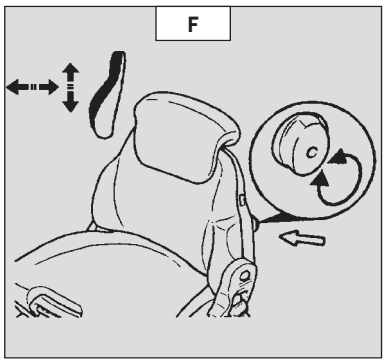

ADJUSTMENT OF THE ANGLE OF THE BACK-REST (FIG. G)
- Support the back-rest, pull the lever and position the back-rest to find the desired position.

If you do not support the back-rest when making adjustments, it swings completely forwards.

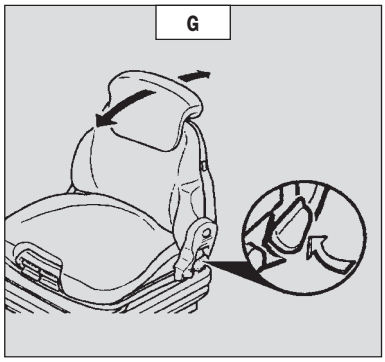

LONGITUDINAL ADJUSTMENT (FIG. H)
- Adjust the locking lever until you reach the position required. This then locks and the seat will not shift into another position.

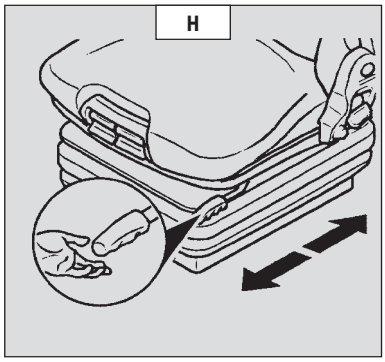

MAINTENANCE (FIG. I)
Dirt may adversely affect the correct functioning of the seat. For this reason, make sure your seat is always clean.
- To clean or change the cushions, simply remove them from the seat frame.

A rocking head-rest increases the risk of an accident !

Avoid wetting the cushion fabric when cleaning. Check the resistance of the fabric on a small hidden area before using any fabric or plastic cleaner.

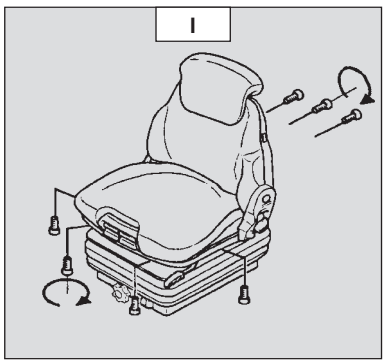

1 - PNEUMATIC DRIVER'S SEAT (OPTION)

DESIGNED FOR MAXIMUM COMFORT, THIS SEAT CAN BE ADJUSTED AS FOLLOWS.

WEIGHT AND SEAT HEIGHT ADJUSTMENT
WEIGHT ADJUSTMENT (FIG. A)
It is advised that you adjust the seat according to your weight when sitting.
- Switch on lift truck ignition.
- Push or pull lever 1 until green appears in display 2 indicating correct adjustment according to your weight.

NOTE: To avoid any health problems, it is recommended that the weight should be checked and adjusted before starting up the lift truck.

SEAT HEIGHT ADJUSTMENT (FIG. B)
When weight adjustment has been carried out, you can then modify seat height.
- Keep the ignition on in the lift truck.
- Push or pull lever 1 until green appears and adjust the height of the seat while checking that the green in display 2 remains visible.

To avoid causing any damage, do not activate the compressor for over 1 minute.

SEAT BACK-REST ANGLE ADJUSTMENT (FIG. C)
The back-rest angle of the seat may be adjusted to suit the individual.
- Press the left-hand button while pushing on the seat or relaxing pressure on the seat to find a comfortable position.

SEAT DEPTH ADJUSTMENT (FIG. D)
The depth of the seat may be adjusted to suit the individual.
- Press the right-hand button while raising or lowering the seat to find the desired position.

EXTENDING THE HEAD-REST (FIG. E)
- The height of the back-rest can be adjusted by pulling it upwards (the notches will click) up to the stop.
- The head-rest can be removed by applying sufficient pressure to pull it off the stop.

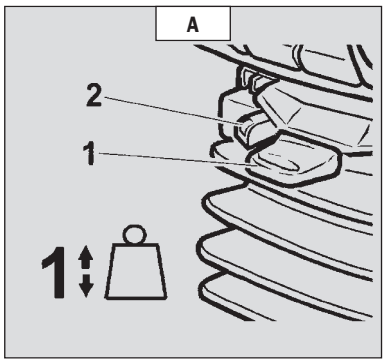

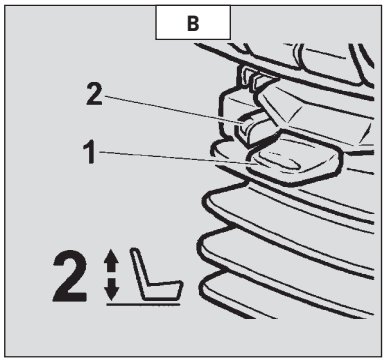

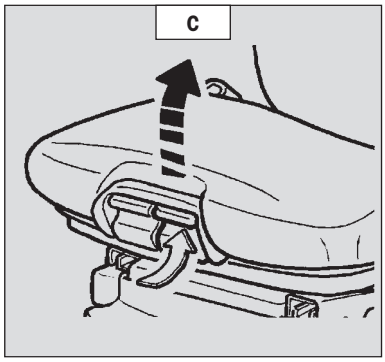

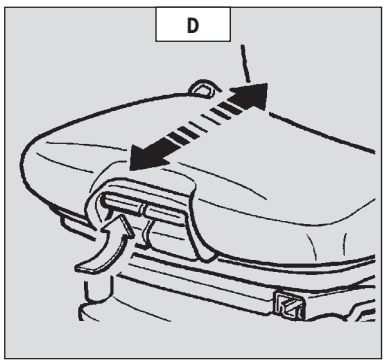

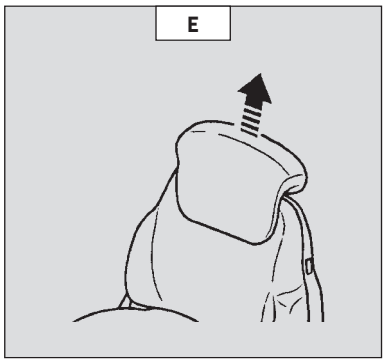

LUMBAR ADJUSTMENT (FIG. F)
This increases the comfort of the seat and the driver's freedom of movement.
- Turn the handle either left or right to adjust the height or depth of the lumbar support.

ADJUSTMENT OF THE ANGLE OF THE BACK-REST (FIG. G)
- Support the back-rest, pull the lever and position the back-rest to find the desired position.

If you do not support the back-rest when making adjustments, it swings completely forwards.

HORIZONTAL SHOCK ABSORBER (FIG. H)
In certain conditions (e.g. driving with a trailer) it is advised that a horizontal shock absorber be used. The driver's seat is thus better able to absorb jerks in the direction of travel.
- Position 1: Horizontal shock absorber fitted.
- Position 2: Horizontal shock absorber removed.

LONGITUDINAL ADJUSTMENT (FIG. I)
- Adjust the locking lever until you reach the position required. This then locks and the seat will not shift into another position.

SERVICING (FIG. J)
Dirt may adversely affect the correct functioning of the seat. For this reason, make sure your seat is always clean.
- To clean or change the cushions, simply remove them from the seat frame.

A rocking head-rest increases the risk of an accident !

Avoid wetting the cushion fabric when cleaning. Check the resistance of the fabric on a small hidden area before using any fabric or plastic cleaner.

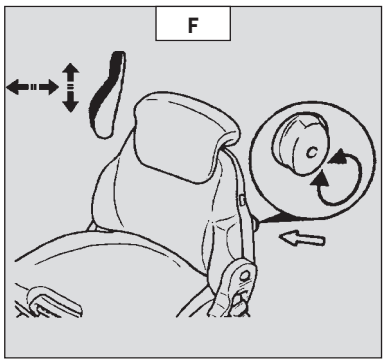

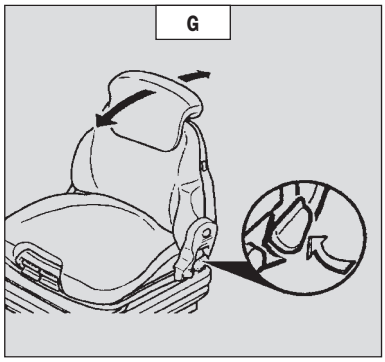

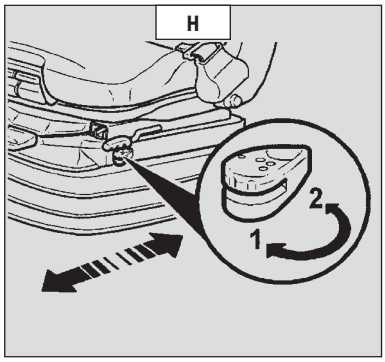

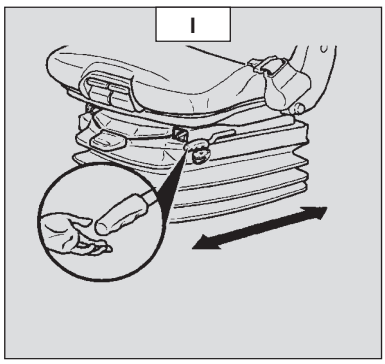

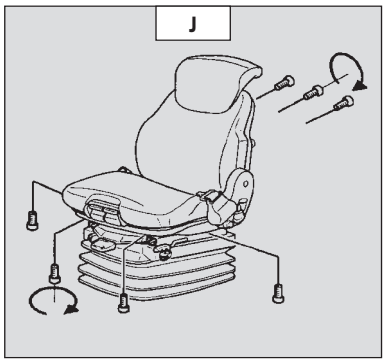

2 - SAFETY BELT

- Sit correctly on the seat.
- Check that seat belt is not twisted.
- Place the seat belt at hip level.
- Attach the seat belt and check that it locks.
- Adjust the seat belt to your body shape without squeezing your hip and without over-slack.

In no event should the lift truck be used if the seat belt is defective (fixing, locking, cuts, tears, etc.). Repair or replace the seat belt immediately.

3 - IGNITION SWITCH

The key switch has five positions:

P - Ignition off, parking position.
O - Ignition switched off and I.C. engine stopped.
I - Ignition on.
II - Heating.
III - The I.C. engine starts, return to position I as soon as the key is released.

4 - EMERGENCY STOP BUTTON

- In the event of danger, it lets you stop the I.C. Engine and thereby cut out all hydraulic movements.
- Pull the button to disable it before restarting the lift truck.

Be careful not to stop hydraulic movements suddenly when using the emergency stop.

Warning, when driving, the lift truck will be brought to a sudden stop if actuating the parking brake. If possible, stop the lift truck before using the emergency stop.

5 - BATTERY CUT-OFF

- For quickly disconnecting the battery when working on the electric circuit or when soldering, for example.

6 - MAN-MACHINE INTERFACE (MMI)

6A - DRIVER PRESENCE
6B - INSTRUMENT CONTROL PANEL
6C - PANEL FOR BUTTONS AND KEYBOARD
6D - SCREEN DISPLAY

UPDATED: In order to gain maximum advantage from the Man-Machine Interface of your lift truck, contact your dealer to receive the most recent available version of the software.

6A - DRIVER PRESENCE

The driver's presence is validated when the following are performed.
1 - The cab door is closed.
2 - The engine is started and the accelerator pedal is pressed.
It is only as from this time that the lift truck will be operational.

When driving (at speeds of less than 3 km/h), as soon as the door is opened and the accelerator is released, the system detects the operator's absence and immediately activates the parking brake which may cause a sudden stop for the lift truck.

6B - INSTRUMENT CONTROL PANEL

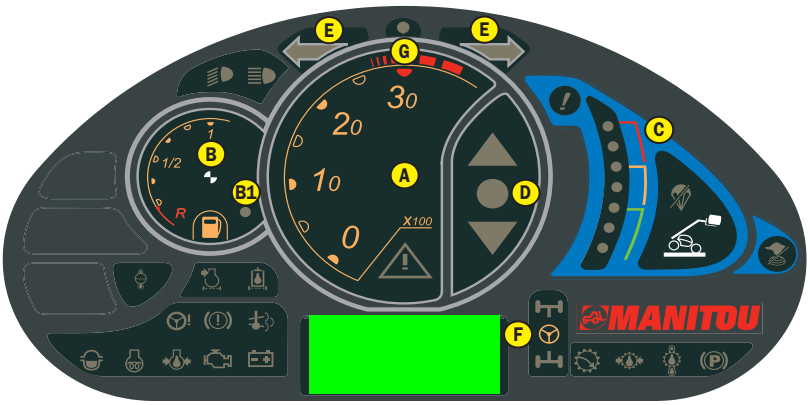

A - REV COUNTER

B - FUEL LEVEL
When the yellow warning light B1 comes on it means that you are in reserve and that your running time is limited.

C - LONGITUDINAL STABILITY WARNING LIGHT
See: 2 - DESCRIPTION: 7 - LONGITUDINAL STABILITY LIMITER AND WARNING DEVICE.

D - FORWARD/NEUTRAL/REVERSE LIGHT
See: 2 - DESCRIPTION: 20 - FORWARD/NEUTRAL/REVERSE GEAR SELECTION.

E - GREEN STEERING LIGHTS
A continuous beeping sound on and off at the same time as the steering lights when using flashing lights or hazard warning lights.

F - GREEN WARNING LIGHTS FOR WHEEL ALIGNMENT
See: 2 - DESCRIPTION: 22 - STEERING SELECTION.

G - DIGICODE INDICATOR LAMP
This light flashes when the digicode is enabled (see: 2 - DESCRIPTION: 6D - SCREEN DISPLAY).

MAJOR FAULT WARNING LIGHT
When this light is on it indicates that there is a major fault that may affect the safety for the lift truck or the driver (see: 2 - DESCRIPTION: 6D - SCREEN DISPLAY).

GREEN LIGHT FOR LOW BEAM

BLUE LIGHT FOR MAIN BEAM

I.C. ENGINE WATER LEVEL AND TEMPERATURE LAMP
COLD ENGINE: If the lamp comes on when the lift truck is running, this means that the coolant level is too low. Immediately stop the engine and check the coolant level.
HOT ENGINE: If the lamp comes on when the lift truck is running, this means that the coolant temperature is too high. Immediately stop the engine immediately and seek the cause of the cooling system malfunction.

AIR FILTER CLOGGING LAMP
The lamp comes on when the air filter cartridge is clogged up. When this lamp remains continuously lit, the cartridge needs changing. Stop the lift truck and carry out the necessary repairs (see cleaning and replacement requirements in chapter: 3 - MAINTENANCE: SERVICING SCHEDULE).

HYDRAULIC RETURN OIL FILTER CARTRIDGE CLOGGING LAMP
The lamp come on when the hydraulic return oil filter cartridge is clogged up. When this lamp remains continuously lit the cartridge needs changing. Stop the lift truck and carry out the necessary repairs (see cleaning and replacement requirements in chapter: 3 - MAINTENANCE: SERVICING SCHEDULE).
NOTE: This lamp comes on by cold weather or when starting the fork lift truck, it goes off when the hydraulic oil reaches its operating temperature.

POWER-ASSISTED STEERING FAULT INDICATOR LAMP
If the lamp comes on when the lift truck is running, stop the I.C. engine immediately and look for the cause (possible leak, etc.).

BRAKE FLUID LEVEL OR POWER-ASSISTED BRAKING FAULT INDICATOR LAMP
If the lamp comes on, when the lift truck is running, stop the I.C. engine immediately and check the braking oil level. In the event of an abnormal drop in the level, consult your dealer.

WARNING LAMP NOT AVAILABLE

WATER IN FUEL PRE-FILTER LAMP
This lamp will come on when there is water in the fuel pre-filter. Stop the lift truck and carry out the necessary repairs (see: 3 - MAINTENANCE: SERVICING SCHEDULE).

ENGINE PREHEATING LAMP
This lamp comes on when the lift truck's ignition is switched on and should go out as soon as pre-heating is ended. If it comes on while the lift truck is in operation, immediately stop the I.C engine and find the cause.

I.C. ENGINE OIL PRESSURE LAMP
If the lamp comes on when the lift truck is running, stop the I.C. engine immediately and look for the cause (see oil level in I.C. engine crankcase).

I.C. ENGINE PREHEATING FAULT INDICATOR LAMP
If the lamp comes on when the lift truck is running, stop the I.C. engine immediately and look for the cause (possible leak, etc.).

BATTERY LOAD LAMP
If this lamp comes on when the lift truck is running, switch off the I.C engine immediately and check the electric circuit and the alternator belt.

GREEN PROGRESSIVE INCHING TRANSMISSION MODE INDICATOR LAMP
This lamp comes on when using the progressive transmission "INCHING" mode (see: 2 - DESCRIPTION: 6C - PANEL FOR BUTTONS AND KEYBOARD).

GEAR BOX OIL PRESSURE LAMP
This lamp comes on when there is an abnormal drop in gear box pressure. Stop the lift truck and look for the cause (e.g., Low oil level in the transmission, internal leak in the transmission, etc.).

GEAR BOX OIL TEMPERATURE LAMP
This lamp comes on when the temperature of the gear box oil is abnormally high. In this case, place the forward/reverse selector in neutral and let the I.C. engine running at idle for a few minutes. If the lamp remains on, stop the lift truck and contact your dealer.
NOTE: Abnormal heating of the oil may be linked to an incorrect use of the gear box ratios (see: 2 - DESCRIPTION: 21 - GEAR LEVER).

PARKING BRAKE LAMP
This lamp comes on when the parking brake is applied.

HYDRAULIC MOVEMENT NEUTRALISATION LAMP
The lamp lights when the hydraulic controls are neutralised and when a forbidden hydraulic movement is requested.

6C - PANEL FOR BUTTONS AND KEYBOARD

A beep is sounded each time one of the buttons is pressed.

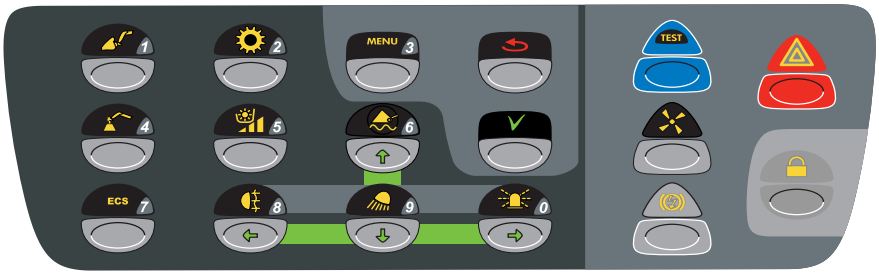

"BUCKET" MODE (NOT USED)
See: 2 - DESCRIPTION: 7 - LONGITUDINAL STABILITY LIMITER AND WARNING DEVICE.

OPTION PROGRESSIVE TRANSMISSION "INCHING" MODE

STANDARD TRANSMISSION MODE (default mode)

OPTION PROGRESSIVE TRANSMISSION "INCHING" MODE IN FORWARD AND REVERSE GEAR (OPTION)
The indicator on the instrument control panel will light when it is in use.

- The operating screen displays the enabled mode. Press the button to display the other available mode(s).

CHANGE MODE

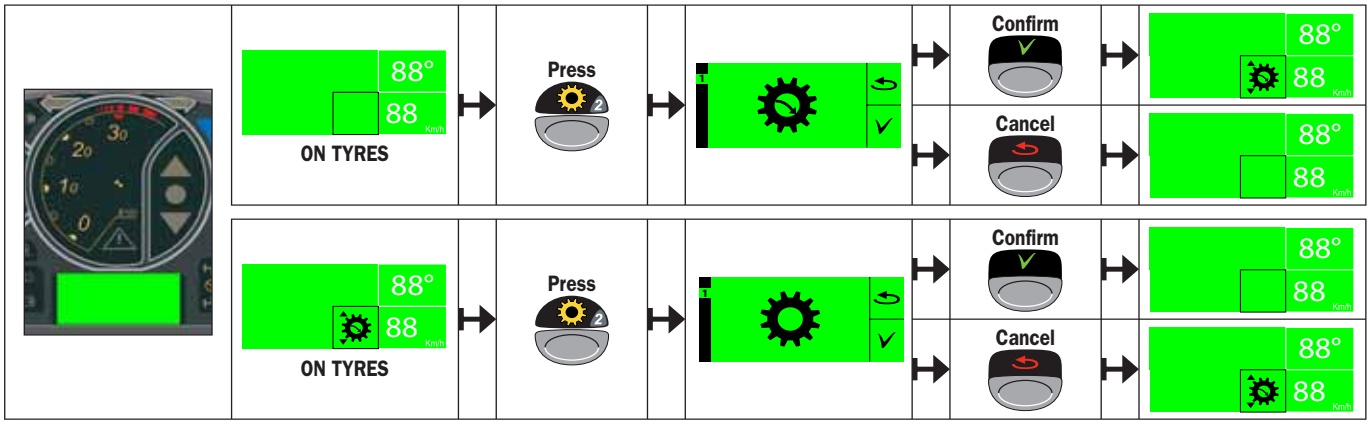

"SUSPENDED LOAD" MODE
See: 2 - DESCRIPTION: 7 - LONGITUDINAL STABILITY LIMITER AND WARNING DEVICE.

ATTACHMENT CIRCUIT

NOTE: In PLATFORM mode, only the “ATTACHMENT CIRCUIT UNLOCKED” mode is authorized.

ATTACHMENT CIRCUIT UNLOCKED (by default)

ATTACHMENT CIRCUIT LOCKED

It is recommended to use this function when the lift truck is not fitted with hydraulic attachment.

ATTACHMENT CIRCUIT IN CONTINUOUS MODE

The indicator will light when it is in use.

By default, the attachment circuit in continuous mode is disabled as soon as the operator leaves the cab. This condition can be changed from the OPT menu on the menu screen.

- The operating screen displays the enabled mode. Press the button to display the other available mode(s).

NOTE: On stabilizers, the display in zone 2 on the operating screen switches to zone 6/7.

CHANGE MODE

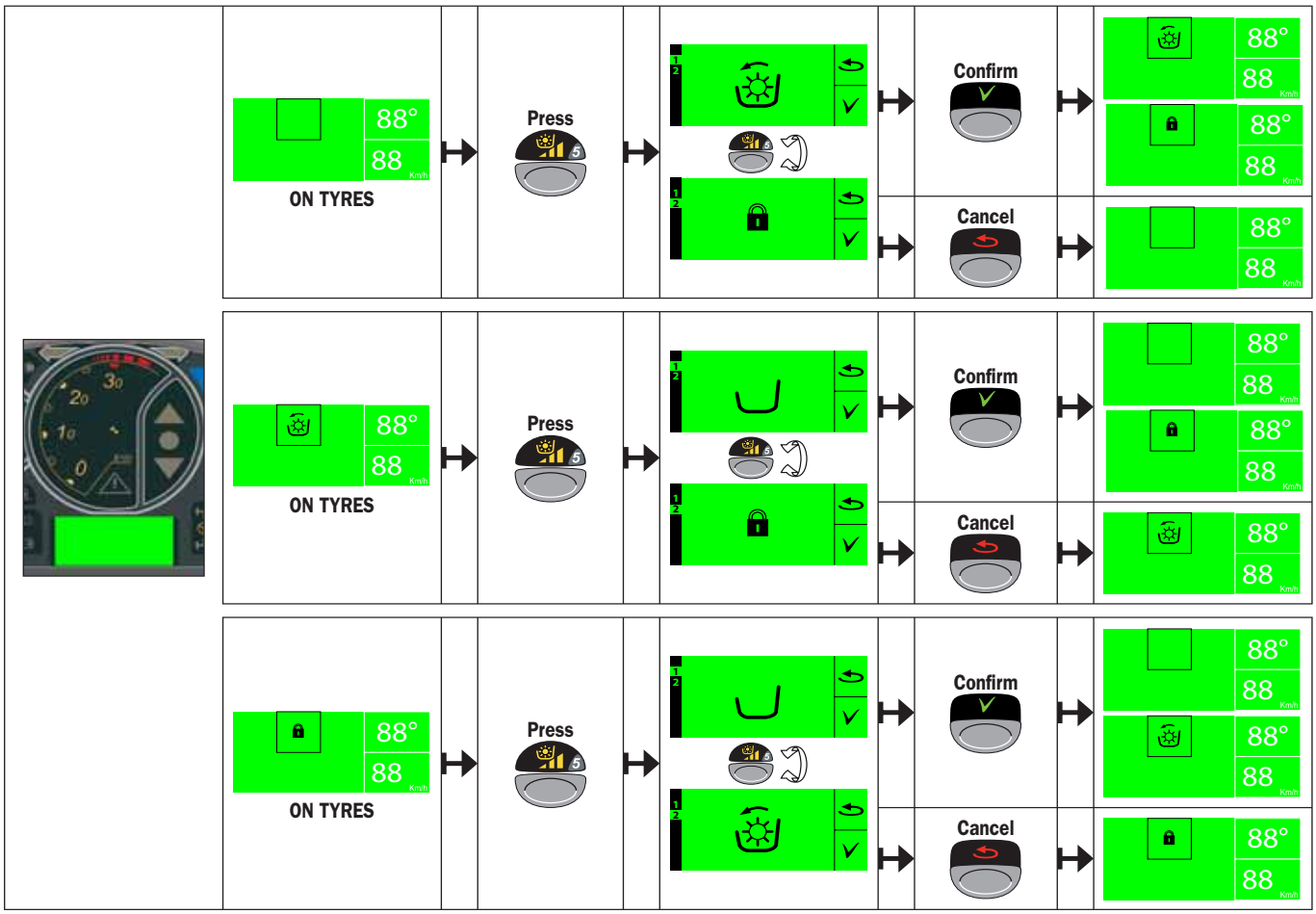

ADJUSTING THE ATTACHMENT CIRCUIT HYDRAULIC FLOW RATE IN CONTINUOUS MODE

- The pictogram flashes, and switches to the setting screen XX% as soon as hydraulic flow rate is selected using button A on the attachment hydraulic control lever.
- Button A forward for positive percentage (+ XX %), backward for negative percentage (XX %).
- Hold button A in the same position for 2 seconds to confirm the chosen hydraulic flow rate +XX%.
- Press the button , or actuate button A, or switch off the I.C. engine to return to the screen with the flashing pictogram 88° 88 and thus disable continuous mode.

OPTION JIB SUSPENSION (NOT AVAILABLE)

ATTACHMENT EASY CONNECTION

For easily connecting and disconnecting the attachment.

- Press for two seconds on the push-button to release the attachment circuit hydraulic pressure. Screens and will be alternately displayed.
- Connect or disconnect the rapid connectors of the hydraulic attachment (see: 4 - OPTIONAL ATTACHMENTS FOR USE WITH THE RANGE: PICKING UP THE ATTACHMENTS).

OPTION REAR FOG LIGHT

Only works when the low beam or main beam lights are switched on. The indicator will light when in use.

OPTION FRONT WORKING HEAD LIGHTS

ROTATING BEACON LIGHT

MENU SCREEN DISPLAY

See: 2 - DESCRIPTION: 6D - SCREEN DISPLAY.

CANCEL OR BACK

CONFIRM

TESTING THE LONGITUDINAL STABILITY LIMITER AND WARNING DEVICE

See: 2 - DESCRIPTION: 7 - LONGITUDINAL STABILITY LIMITER AND WARNING DEVICE.

OPTION SELF-CLEANING FAN (NOT AVAILABLE)

HAND-OPERATED PARKING BRAKE

The hand-operated parking brake can be configured from the OPT menu in the menu screen.

HAZARD WARNING LIGHTS

This switch enables the L.H. and R.H. Indicators to be switched on simultaneously, with the ignition off.

LOCKING HYDRAULIC CONTROLS

NOTA: In PLATFORM mode, only “HYDRAULIC CONTROLS AVAILABLE” mode is authorized.

HYDRAULIC CONTROLS AVAILABLE (by default)

TILT CONTROL LOCKED

HYDRAULIC CONTROLS LOCKED

When driving on the road, it is strongly recommended that you lock all hydraulic movements.

- Press the button to display the other available mode(s), the first screen displayed is the opposite of the enabled mode.

6D - SCREEN DISPLAY

SCREEN OFF

Lift truck parked, with ignition off and without the driver.

MANITOU **LOGO SCREEN**

System initialising. A beep is sounded when this screen appears. If the screen remains permanently displayed, contact your dealer.

DIGIC 0 0 _ _ **DIGICODE SCREEN**

The digicode is disabled by default. It can be enabled from the OPT menu on the menu screen. A beep is sounded when this screen appears.

- Switch on the lift truck ignition. Enter the code (default 0000) using the keys on the keyboard and confirm with the confirm button . Automatically moves to the next character.

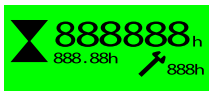

HOUR METER SCREEN

Operator present in the cab. The screen displays the total number of hours worked [888888h], the number of hours for that working day [888.88h] and the number of hours before the next major maintenance [888h].

RESETTING THE DAILY WORKING HOURS COUNTER BACK TO ZERO
- Authorization of this function can be configured from the OPT menu in the menu screen.

RESETTING THE MAINTENANCE COUNTER TO 500H
- Reset the maintenance counter to 500h from the XPRT menu in the menu screen.

AUTOMATIC STANDBY SCREEN

In ECO mode the lift truck stops the IC engine after 1 minute at standstill. Switch off the ignition before restarting the lift truck.

OPERATING SCREEN

Lift truck is operational (different screen depending on the operating mode).

1 2 3 4 / 5 6 7 8		LIFT TRUCK ON TIRES
1		Blank screen.
		If no function is unlocked and at least one function is locked (see unlocking screen).
		If at least one function is unlocked (see unlocking screen).
2		Blank screen.
		Attachment circuit unlocked.
		Attachment circuit in continuous mode.
		Platform operation from the driver's cab controls.
		Radio-control OPTION.
3		Blank screen.
		Rear axle oscillation cannot be blocked or is permanently blocked in platform operation mode. The visual alarm and long beep are triggered simultaneously.
4	88°	Jib lifting angle in degrees.
	- - °	Lifting angle sensor fault (contact your dealer).
5		Blank screen.
		Maintenance key.
6		Blank screen.
7		Blank screen.
		Transmission locked in neutral, driver presence not validated.
		OPTION progressive INCHING transmission mode in forward and reverse gear.
8	88 Km/h	Travelling speed of the lift truck whatever the gear ratio in km/h.
	- - Km/h	Lift truck speed sensor fault (contact your dealer).

1 2 3 4 / 5 6 7 8		LIFT TRUCK ON STABILIZERS	
1		Blank screen.	
		If no function is unlocked and at least one function is locked (see unlocking screen).	
		If at least one function is unlocked (see unlocking screen).	
2/3		Blank screen.	
		Platform operation from the driver's cab controls.	
		Platform operation from the platform controls.	
	SOS	See rescue or breakdown repair procedure in part: 2 - DESCRIPTION: OPERATING THE PLATFORM.	
		Radio-control OPTION.	
4	88°	Jib lifting angle in degrees.	
	- - °	Lifting angle sensor fault (contact your dealer).	
5		Blank screen.	
		Maintenance key.	
6/7		Blank screen.	
		Attachment circuit unlocked.	
		Attachment circuit in continuous mode.	
		Rear axle oscillation blocked in platform operation mode.	
		Rear axle oscillation cannot be blocked or is permanently blocked in platform operation mode. The visible alarm and a long beep are triggered simultaneously.	
8		Stabilizers fitted on the ground and under pressure.	To validate the information, the last movement of the stabiliser must be lowering.
		Left stabilizer fitted on the ground and under pressure.	
		Right stabilizers fitted on the ground and under pressure.	

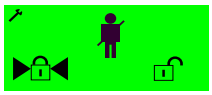

LOCKING SCREEN

By default, the operator is not permitted to unlock the functions (see: 2 - DESCRIPTION: 6D - SCREEN DISPLAY: MENU SCREEN).
One of these screens appears when the system detects an operating defect on the lift truck. A beep is sounded when this screen appears.
These defects cause certain functions to be prohibited in order to ensure safety. However it is possible for the operator and under his own responsibility (and/or that of the person in charge of the establishment) to override the prohibition in order to secure the parking of the lift truck (e.g., unlocking the hydraulic distributor fault in order to retract and lower the jib).
The unlocking is activated temporarily, the function will be locked again as soon as the engine is switched off.

	Driver presence.
	Transmission fault.
	Retracting stabilizer.
	Tilt.
	Telescoping jib.
	Hydraulic distributor.
	Platform from driver's cab controls.

UNLOCKING THE FUNCTION

- Move the triangles using the button to the open padlock and confirm with the button .

In any event, stop the lift truck and contact your dealer.

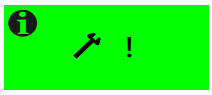

HELP SCREEN

One of these screens appears to inform the operator about the operations to be carried out in the present configuration (e.g., if the operator wants to lower the stabilizers, he must first lower the jib).
A beep is sounded when this screen appears.

	Major maintenance interval exceeded.
	Set down the stabilizers.
	Lower the jib before lowering the stabilizers.
	Driver presence not validated, close the door and press the accelerator pedal.
	Driver presence not validated, press the accelerator pedal.
	Overspeed, reduce speed. or Transmission fault, the visual alarm is triggered at the same time. Immediately stop the lift truck and find the cause.
	Retract and/or lower the jib before raising the stabilizers.
	Raise the stabilizers and/or lower the jib before correcting the tilt.
XX%	Using the attachment circuit in continuous mode and indicating the hydraulic capacity.
F N R	Reset the forward/reverse selector via neutral.
	Jib chain tension fault.
	Validate the use of the rescue or breakdown procedure.
NOK	Lift truck not correctly levelled for using the platform.
OK	Lift truck correctly levelled for using the platform.

MENU SCREEN

- Press the button to display the menu screen with the time and date. Navigate horizontally between menus using the buttons and vertically in the sub-menus using the buttons .

INFO

- Time and date (by default).
- Lift truck in degraded mode and/or fault detected (see error code table).
- “Check Maintenance” appears for a few seconds if maintenance is necessary.

CLOCK

HOUR: Change the hour.
DATE: Change the date.
FORM: Change the time or date format.

LCD

BACKL: Backlight.
CONTR: Contrast.

OPT

The contents of this menu can be accessed by means of a customer password.

RST H: Resetting of daily hour counter to zero, permitted (by default) or not permitted.
PARK: Hand-operated parking brake or automatic (by default).
CFLOW: Forced operation without driver presence permitted or not permitted (by default).
LLMC: Disabling of aggravating hydraulic movement cut-off permitted (by default) or not permitted.
PASS: Fault override permitted or not permitted (by default).
UNIT: Speed of travel displayed in MPH or Km/h (by default).
DIGI1: Digicode enabled or not enabled (by default).
DIGI2: Change the 4 figure digicode (lift truck start-up).
CUST: Change the customer code.

DIAG

The contents of this menu enables your dealer to perform a diagnosis on the Man-Machine Interface.

XPRT

RESET > HOURM: Reset the partial hour meter to zero.
MAINT: Reset the maintenance interval to 500 hours.
ADMIN > ADMIN: Change the administrator code.
ERASE > MC: Clear faults from the computer of the Man-Machine Interface.
MP1: Clear faults from computer MP1.
MP2: Clear faults from computer MP2.
CALIB > SECU: Calibration of jib angle and strain gauge.
GAUGE: Recalibration of strain gauge.

ERROR CODE	COMPONENT	FAULT TYPE	DETECTED BY
A00003	I.C. engine	Fault	MMI
A00006	Gear box	Fault	MMI
A00007	Air filter	Fault	MMI
A00008	Hydraulic filter	Fault	MMI
A00009	I.C. engine	Fault	MMI
A003F1	Gear box	Fault	Computer MP1
A10002	I.C. engine	Fault	MMI
A10004	Brake system	Fault	MMI
A10005	Gear box	Fault	MMI
A10051	Alternator	Fault	MMI
A1046A	Power-assisted steering	Fault	Computer MP1
A1048A	Power assisted braking	Fault	Computer MP1
A20000	Strain gauge	Inconsistency	MMI
A203E8	Hydraulic controls	inconsistency	Computer MP1
A203EC	Accelerator	inconsistency	Computer MP1
A203EF	Jib angle	inconsistency	Computer MP1
A203F0	Door switch	inconsistency	Computer MP1
A203F4	Jib retracted switch	inconsistency	Computer MP1
A203FE	Hydraulic controls	inconsistency	Computer MP1
A203FF	Hydraulic controls	inconsistency	Computer MP1
A20408	Hydraulic control valve	Fault	Computer MP1
2D003C	Hydraulic controls (unit)	Calibration	Computer MP2
2D003D	Hydraulic controls (unit)	Calibration	Computer MP2
2D003E	Hydraulic controls	Calibration	Computer MP1
2D003F	Hydraulic controls	Calibration	Computer MP1
2D0011	Jib angle	Calibration	Computer MP1
2D0012	Jib angle	Calibration	Computer MP1
2D0024	Accelerator	Calibration	Computer MP1
2D0045	Hydraulic controls (unit)	Calibration	Computer MP2
2D0046	Hydraulic controls (unit)	Calibration	Computer MP2
20010	Hydraulic control valve	PVG error	Computer MP2
20012	Hydraulic control valve	PVG error	Computer MP2
20014	Hydraulic control valve	PVG error	Computer MP2
20017	Hydraulic control valve	PVG error	Computer MP2
22001E	Gear box	Fault	Computer MP1
28000B	Speed sensor	Fault	Computer MP1
220020	Gear box	Fault	Computer MP1
220026	Slope sensor	Calibration	Computer MP2
220028	Fuel gauge	Calibration	MMI
230130	Jib chain sensors	Fault	Computer MP1
230131	Jib chain sensors	Fault	Computer MP1
240130	Jib chain sensors	Fault	Computer MP1
240131	Jib chain sensors	Fault	Computer MP1
3000A	Gear box	Short circuit	Computer MP1
3000B	Gear box	Short circuit	Computer MP1
3000C	Flow controller	Short circuit	Computer MP1
3001B	Hydraulic control valve	Short circuit	Computer MP2
3001D	Right stabiliser electrovalve	Short circuit	Computer MP2
3001F	Left stabiliser electrovalve	Short circuit	Computer MP2
3002A	Unloading electrovalve	Short circuit	Computer MP2
3002B	Rear axle blocking electrovalve	Short circuit	Computer MP2
3002D	Jib suspension electrovalve	Short circuit	Computer MP2
3002E	Jib suspension electrovalve	Short circuit	Computer MP2
3002F	Fast gear 2 electrovalve	Short circuit	Computer MP2
3003A	Hydraulic control valve	Short circuit	Computer MP1
3006A	Right-hand sidelight	Short circuit	Computer MP1
3006B	Left-hand dipped beam headlight	Short circuit	Computer MP1
3006C	Left-hand main beam headlight	Short circuit	Computer MP1
3006D	Left-hand indicator lights	Short circuit	Computer MP1
3006E	Right-hand indicator lights	Short circuit	Computer MP1
3007A	Rear axle blocking electrovalve	Short circuit	Computer MP2
3007B	Trailer stop lights	Short circuit	Computer MP1
3007C	Front working lights	Short circuit	Computer MP1
3007D	Trailer reversing light	Short circuit	Computer MP1
3007E	Trailer fog light	Short circuit	Computer MP1
3007F	Right-hand dipped beam headlight	Short circuit	Computer MP1
3008F	Parking brake	Short circuit	Computer MP1
30001	Reversing sound alarm	Short circuit	Computer MP1
30002	Horn	Short circuit	Computer MP1
30026	Hydraulic control valve	Short circuit	Computer MP1
30027	Hydraulic control valve	Short circuit	Computer MP1

ERROR CODE	COMPONENT	FAULT TYPE	DETECTED BY
30028	Hydraulic control valve	Short circuit	Computer MP1
30029	Hydraulic control valve	Short circuit	Computer MP1
30030	Low speed electrovalve	Shortcircuit	Computer MP2
30031	Forward/reverse selector electrovalve	Short circuit	Computer MP2
30032	High speed 1 electrovalve	Short circuit	Computer MP2
30039	Jib head electrovalve	Short circuit	Computer MP1
30064	Stop lights	Short circuit	Computer MP1
30065	Front working lights	Short circuit	Computer MP1
30066	Reversing light	Short circuit	Computer MP1
30067	Rear fog light	Short circuit	Computer MP1
30068	Ceiling light	Short circuit	Computer MP1
30069	Left-hand sidelight	Short circuit	Computer MP1
30078	Rotating light	Short circuit	Computer MP1
30080	Right-hand main beam headlight	Short circuit	Computer MP1
30081	Trailer left-hand indicator light	Short circuit	Computer MP1
30082	Trailer right-hand indicator light	Short circuit	Computer MP1
400CA	Fuel electrovalve	Short circuit	MMI
400CD	Windscreen wiper	Short circuit	MMI
4000A	Gear box	Short circuit	Computer MP1
4000B	Gear box	Short circuit	Computer MP1
4000C	Flow controller	Short circuit	Computer MP1
4001A	Hydraulic control valve	Short circuit	Computer MP2
4001B	Hydraulic control valve	Short circuit	Computer MP2
4001D	Right stabiliser electrovalve	Short circuit	Computer MP2
4001F	Left stabiliser electrovalve	Short circuit	Computer MP2
4002A	Unloading electrovalve	Short circuit	Computer MP2
4002B	Rear axle blocking electrovalve	Short circuit	Computer MP2
4002D	Jib suspension electrovalve	Short circuit	Computer MP2
4002E	Jib suspension electrovalve	Short circuit	Computer MP2
4002F	Fast gear 2 electrovalve	Short circuit	Computer MP2
4003A	Hydraulic control valve	Short circuit	Computer MP1
4003B	Transmission computer power supply	Short circuit	Computer MP1
4006A	Right-hand sidelight	Short circuit	Computer MP1
4006B	Left-hand dipped beam headlight	Short circuit	Computer MP1
4006C	Left-hand main beam headlight	Short circuit	Computer MP1
4006D	Left-hand indicator lights	Short circuit	Computer MP1
4006E	Right-hand indicator lights	Short circuit	Computer MP1
4007A	Rear axle blocking electrovalve	Short circuit	Computer MP2
4007B	Trailer stop lights	Short circuit	Computer MP1
4007C	Front working lights	Short circuit	Computer MP1
4007D	Trailer reversing light	Short circuit	Computer MP1
4007E	Trailer fog light	Short circuit	Computer MP1
4007F	Right-hand dipped beam headlight	Short circuit	Computer MP1
4008C	Engine speed relay	Short circuit	Computer MP2
4008D	Engine starting relay	Short circuit	Computer MP2
4008E	Parking brake	Short circuit	Computer MP1
4008F	Parking brake	Short circuit	Computer MP1
40001	Reversing sound alarm	Short circuit	Computer MP1
40002	Horn	Short circuit	Computer MP1
40011	Hydraulic control valve	Short circuit	Computer MP2
40013	Hydraulic control valve	Short circuit	Computer MP2
40016	Hydraulic control valve	Short circuit	Computer MP2
40019	Hydraulic control valve	Short circuit	Computer MP2
40026	Hydraulic control valve	Short circuit	Computer MP1
40027	Hydraulic control valve	Short circuit	Computer MP1
40028	Hydraulic control valve	Short circuit	Computer MP1
40029	Hydraulic control valve	Short circuit	Computer MP1
40030	Low speed electrovalve	Short circuit	Computer MP2
40031	Forward/reverse selector electrovalve	Short circuit	Computer MP2
40032	Electrovalve Fast gear 1	Short circuit	Computer MP2
40039	Jib head electrovalve	Short circuit	Computer MP1
40064	Stop lights	Short circuit	Computer MP1
40065	Front working lights	Short circuit	Computer MP1
40066	Reversing light	Short circuit	Computer MP1
40067	Rear fog light	Short circuit	Computer MP1
40068	Ceiling light	Short circuit	Computer MP1
40069	Left-hand sidelight	Short circuit	Computer MP1
40078	Rotating light	Short circuit	Computer MP1

ERROR CODE	COMPONENT	FAULT TYPE	DETECTED BY
40080	Right-hand main beam headlight	Short circuit	Computer MP1
40081	Trailer left-hand indicator light	Short circuit	Computer MP1
40082	Trailer right-hand indicator light	Short circuit	Computer MP1
42000A	Gear box	Power supply fault	Computer MP1
42000B	Hydraulic controls (unit)	Power supply fault	Computer MP2
42000D	Hydraulic controls	Power supply fault	Computer MP1
42000E	Hydraulic controls (unit)	Power supply fault	Computer MP2
420006	Frequency sensor	Power supply fault	Computer MP1
420007	Jib angle	Power supply fault	Computer MP1
420015	Jib chain sensors	Power supply fault	Computer MP1
420016	Jib chain sensors	Power supply fault	Computer MP1
440001	Wheel alignment sensor	Short circuit	Computer MP1
440011	Gear box	Short circuit	Computer MP1
440014	Parking brake	Short circuit	Computer MP1
450001	Wheel alignment sensor	Disconnected wire	Computer MP1
450011	Gear box	Disconnected wire	Computer MP1
450014	Parking brake	Disconnected wire	Computer MP1
500CA	Fuel electrovalve	Disconnected wire	MMI
500CD	Windscreen wiper	Disconnected wire	MMI
5000A	Gear box	Disconnected wire	Computer MP1
5000B	Gear box	Disconnected wire	Computer MP1
5000C	Flow controller	Disconnected wire	Computer MP1
5001A	Hydraulic control valve	Disconnected wire	Computer MP2
5001B	Hydraulic control valve	Disconnected wire	Computer MP2
5001D	Right stabiliser electrovalve	Disconnected wire	Computer MP2
5001F	Left stabiliser electrovalve	Disconnected wire	Computer MP2
5002A	Unloading electrovalve	Disconnected wire	Computer MP2
5002B	Rear axle blocking electrovalve	Disconnected wire	Computer MP2
5002D	Jib suspension electrovalve	Disconnected wire	Computer MP2
5002E	Jib suspension electrovalve	Disconnected wire	Computer MP2
5002F	Fast gear 2 electrovalve	Disconnected wire	Computer MP2
5003A	Hydraulic control valve	Disconnected wire	Computer MP1
5003B	Transmission computer power supply	Disconnected wire	Computer MP1
5006A	Right-hand sidelight	Disconnected wire	Computer MP1
5006B	Left-hand dipped beam headlight	Disconnected wire	Computer MP1
5006C	Left-hand main beam headlight	Disconnected wire	Computer MP1
5006D	Left-hand indicator lights	Disconnected wire	Computer MP1
5006E	Right-hand indicator lights	Disconnected wire	Computer MP1
5007A	Rear axle blocking electrovalve	Disconnected wire	Computer MP2
5007C	Front working lights	Disconnected wire	Computer MP1
5007F	Right-hand dipped beam headlight	Disconnected wire	Computer MP1
5008C	Engine speed relay	Disconnected wire	Computer MP2
5008D	Engine starting relay	Disconnected wire	Computer MP2
5008E	Parking brake	Disconnected wire	Computer MP1
5008F	Parking brake	Disconnected wire	Computer MP1
50001	Reversing sound alarm	Disconnected wire	Computer MP1
50002	Horn	Disconnected wire	Computer MP1
50026	Hydraulic control valve	Disconnected wire	Computer MP1
50027	Hydraulic control valve	Disconnected wire	Computer MP1
50028	Hydraulic control valve	Disconnected wire	Computer MP1
50029	Hydraulic control valve	Disconnected wire	Computer MP1
50030	Low speed electrovalve	Disconnected wire	Computer MP2
50031	Forward/reverse selector electrovalve	Disconnected wire	Computer MP2
50032	High speed 1 electrovalve	Disconnected wire	Computer MP2
50039	Jib head electrovalve	Disconnected wire	Computer MP1
50064	Stop lights	Disconnected wire	Computer MP1
50065	Front working lights	Disconnected wire	Computer MP1
50066	Reversing light	Disconnected wire	Computer MP1
50067	Rear fog light	Disconnected wire	Computer MP1

ERROR CODE	COMPONENT	FAULT TYPE	DETECTED BY
50069	Left-hand sidelight	Disconnected wire	Computer MP1
50078	Rotating light	Disconnected wire	Computer MP1
50080	Right-hand main beam headlight	Disconnected wire	Computer MP1
7303E8	Man-machine interface	Communication error	Computer MP1
7303E9	Network	Communication error	Computer MP1
7307D0	Man-machine interface	Communication error	Computer MP2
7307D1	Radio control	Communication error	Computer MP2
7307D2	Platform control console	Communication error	Computer MP2
730000	Man-machine interface	Communication error	MMI
8003E8	Computer MP1	Overheating	Computer MP1
8007D0	Computer MP2	Overheating	Computer MP2
8203E9	Computer MP1	Fault	Computer MP1
8203EC	Computer MP1	Fault	Computer MP1
8207D1	Computer MP2	Fault	Computer MP2
8207D4	Computer MP2	Fault	Computer MP2
8303ED	Computer MP1	Fault	Computer MP1
8307D3	Computer MP2	Fault	Computer MP2
8307D5	Computer MP2	Fault	Computer MP2
8403ED	Computer MP1	Fault	Computer MP1
8407D5	Computer MP2	Fault	Computer MP2
8703EA	Computer MP1	Fault	Computer MP1
8707D2	Computer MP2	Fault	Computer MP2
800000	Man-machine interface	Overheating	MMI
820001	Man-machine interface	Fault	MMI
820002	Strain gauge	Fault	MMI
820003	Strain gauge	Fault	MMI
820004	Strain gauge	Fault	MMI
820005	Strain gauge	Fault	MMI

7 - LONGITUDINAL STABILITY LIMITER AND WARNING DEVICE

This device warns the operator of the lift truck's longitudinal stability limits. However, lateral stability can reduce the load chart in the upper part, and this reduction is not detected by the device.
According to the type of work required, the longitudinal stability limiter and warning device allows the operator to operate the lift truck in complete safety.

The operator must respect the lift truck's load chart, and the operating mode according to the attachment.

"HANDLING" MODE		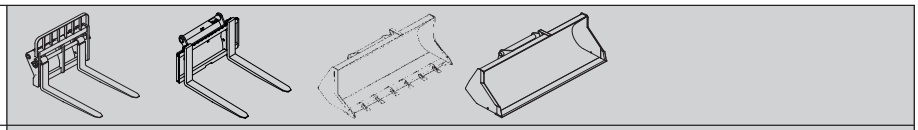
"SUSPENDED LOAD" MODE		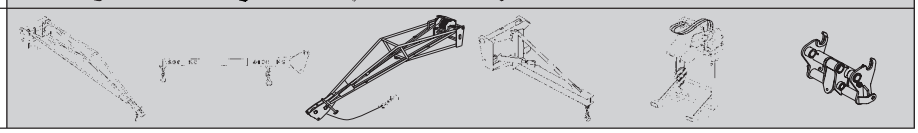

A - "HANDLING" MODE

Use on forks (TFF, PFB, TDL), adjustable attachments on forks (BB, GL) and with buckets (CBC, CBR, CBG, CB4x1).
- By default, the device is in "HANDLING" MODE when the lift truck is started-up, except if the "SUSPENDED LOAD" MODE has been selected before shutting-down the engine.

A1 - A2 - A3: There is a significant reserve of longitudinal stability.
A4 - A5: The lift truck is nearing the limit of longitudinal stability. The alarm sounds simultaneously with a very slow intermittent sound. Move with care.
A6: The lift truck is near at the limit of longitudinal stability. The alarm sounds with a slow intermittent sound. Move with care.
A7: The lift truck is very near at the limit of longitudinal stability. The alarm sounds with a fast intermittent sound. Move with extreme care.
A8: The lift truck is at the authorized limit of longitudinal stability. The alarm sounds with a very fast intermittent sound. All "AGGRAVATING" hydraulic movements are cut-off. Cut-off may be preceded by an automatic slowing of the hydraulic movement. Only make de-aggravating hydraulic movements in the following order: retract and raise the jib.

NOTE: When the jib is retracted, the function for cutting-off "AGGRAVATING" hydraulic movements is disconnected.

B - "BUCKET" MODE (NOT USED)

C - "SUSPENDED LOAD" MODE

Providing a higher margin of safety, use with a crane jib (P, PT, PO), hoist and hoisting eye.
- Place the lift truck in the transport position.
- Press the button for 2 seconds , "SUSPENDED LOAD" MODE is validated by an audible beep and the lighting of the lamp.
- Return to "HANDLING" MODE by pressing the button .

A1 - A2 - A3: There is a significant reserve of longitudinal stability.
A4 - A5: The lift truck is nearing the limit of longitudinal stability. The alarm sounds simultaneously with a very slow intermittent sound. Move with care.
A6: The lift truck is near at the limit of longitudinal stability. The alarm sounds with a slow intermittent sound. Move with care.
A7: The lift truck is very near at the limit of longitudinal stability. The alarm sounds with a fast intermittent sound. Move with extreme care.
A8: The lift truck is at the authorized limit of longitudinal stability. The alarm sounds with a very fast intermittent sound. All "AGGRAVATING" hydraulic movements are cut-off. Cut-off may be preceded by an automatic slowing of the hydraulic movement. Only make de-aggravating hydraulic movements in the following order: retract and raise the jib.

NOTE: When the jib is retracted, the function for cutting-off "AGGRAVATING" hydraulic movements is disconnected.

D - DISABLING "AGGRAVATING" HYDRAULIC MOVEMENT CUT-OFF

Authorization of this function can be configured from the OPT menu in the menu screen.
In certain cases, in order to get out of a difficult situation, the operator can bypass this safety system. Button D temporarily disables the cutting-off of "AGGRAVATING" hydraulic movements.

- Hold down button D, lamp D1 will light (60 second time delay), and simultaneously perform the necessary "AGGRAVATING" hydraulic movement with extreme care.

Remain very vigilant during this operation. The only information available to the operator is the lift truck's dynamic stability.

E - TESTING OF THE LONGITUDINAL STABILITY LIMITER AND WARNING DEVICE

- Short press the button to verify at any time that the longitudinal stability alarm is working.
  - Correct operation: All the LEDs A1 to A8 light for two seconds and an audible beep is sounded.

NOTE: This test does not check the proper adjustment of the longitudinal stability limiter that must be inspected daily or after every 10 hours of service (see: 3 - MAINTENANCE: A - DAILY OR EVERY 10 HOURS SERVICE).

F - STRAIN GAUGE

Disassembly or calibration of the strain gauge is prohibited, this must only be done by specially trained personnel, consult your dealer.

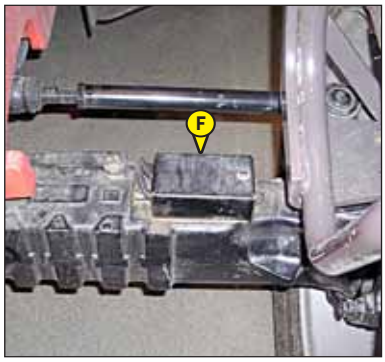

8 - SWITCHES

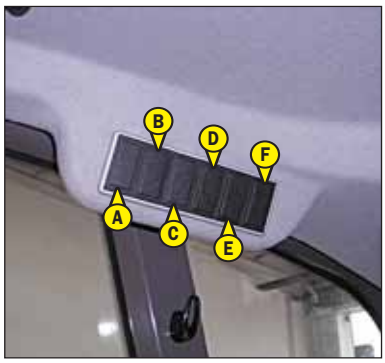

A - OPTION WORKING TAIL LIGHTS

B - OPTION WORKING LIGHTS ON JIB

C - OPTION FOR ROOF WINDSCREEN WIPER AND WINDSCREEN WIPER
This switch, when set in the “high” position, allows the windscreen wiper to be worked and with the “down” position pressed, the windscreen-washer to be operated.

D - OPTION FOR SIDE WINDSHIELD WIPER AND WINDSHIELD WASHER
This switch, when set in the “high” position, allows the windscreen wiper to be worked and with the “down” position pressed, the windscreen-washer to be operated.

E - OPTION REAR WINDOW DE-ICING

F - OPTION

G - OPTION

H - OPTION SINGLE OR DUAL EFFECT REAR HYDRAULIC CONTROL PREDISPOSITION
See: 2 - DESCRIPTION: DESCRIPTION AND USE OF THE OPTIONS.

I - DISABLING OF “AGGRAVATING” HYDRAULIC MOVEMENTS
See: 2 - DESCRIPTION: 7 - LONGITUDINAL STABILITY LIMITER AND WARNING DEVICE.

9 - FUSES AND RELAYS IN THE CAB

A sticker on the inside of the access panel gives a clear display of the use of the components described below.

- Remove access panel 1 to gain access to the fuses and relays, Replace a used fuse with a new fuse of the same quality and capacity. Never reuse a repaired fuse.

K1 - OPTION.
K2 - Front windshield wiper intermittence relay.
K3 - OPTION Air conditioning fan relay.
K4 - OPTION.
K5 - Safety system starting switch relay.
K6 - OPTION Air conditioning compressor relay.
K11 - OPTION.
K12 - OPTION Air conditioning timer relay.

F1 - OPTION.
F2 - OPTION Single or dual effect hydraulic predisposition (7,5A).
F3 - OPTION.
F4 - Heating and ventilation (20A).
F5 - Disabling “AGGRAVATING” hydraulic movement cut-off + seat switch (2A).
F6 - OPTION Jib head electrical provision (5A).
F7 - OPTION Engine immobilizer (2A).
F8 - OPTION Pneumatic seat (10A).
F9 - Ignition (2A).
F10 - OPTION Car radio (2A).

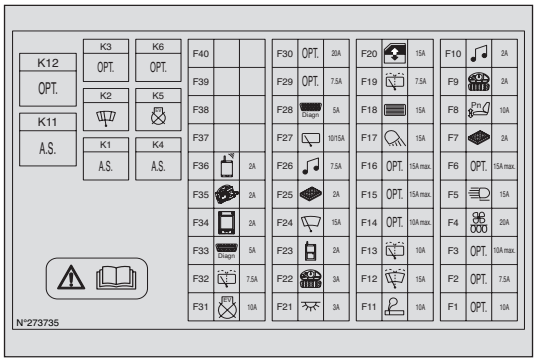

F11 - Cigar lighter (10A).
F12 - Front windscreen wiper and windscreen washer (15A).
F13 - Rear windscreen wiper and windscreen washer (10A).
F14 - OPTION.
F15 - OPTION.
F16 - OPTION Working lights on jib (15A).
F17 - OPTION Working tail light (15A).
F18 - OPTION Rear window de-icing (15A).
F19 - OPTION Roof windscreen wiper and windscreen washer (7,5A).
F20 - Window winder (15A).
F21 - Roof light + door switch (3A).
F22 - Man-Machine Interface (MMI) (3A).
F23 - OPTION Radio-control battery charger (2A).
F24 - Front windscreen wiper motor (15A).
F25 - OPTION Immobiliser (2A).
F26 - OPTION Car radio (7.5A).
F27 - Rear windscreen wiper motor (10A).
- OPTION Roof windscreen wiper motor (10A).
- OPTION Roof windscreen wiper motor + side windscreen wiper motor (15A).
F28 - Diagnostic socket (5A).
F29 - OPTION Air conditioning compressor (7,5A).
F30 - OPTION Air conditioning fan (20A).
F31 - Starter system safety (10A).
F32 - OPTION Side windscreen wiper and windscreen washer (7,5A).
F33 - Diagnostic socket (5A).
F34 - OPTION.
F35 - Remote control (2A).
F36 - OPTION Remote control receiver (2A).
F37 - OPTION.
F38 - Not used.
F39 - Not used.
F40 - Not used.

10 - FUSES AND RELAYS UNDER THE ENGINE HOOD

- Open engine hood 1 in order to gain access to the fuses and relays. Replace a used fuse with a new fuse of the same quality and capacity. Never reuse a repaired fuse.

K20 - Pre-heating relay.
K21 - Engine starter relay.
K22 - OPTION Diesel decongealant relay.
K23 - OPTION.
K24 - Not used.
K25 - Not used.
K26 - Not used.

MAXIFUSE F41 TO F46
F41 - Electronic box MP2 (40A).
F42 - Ignition switch (50A).
F43 - Alternator (80A).
F44 - Electronic box MP1 (40A).
F45 - Power supply for fuses in the cab (40A).
F46 - Preheating I.C. engine (80A).

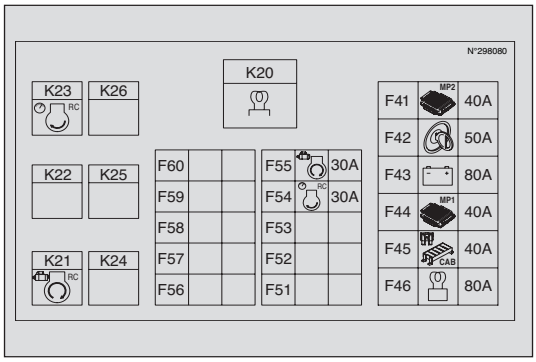

MINIFUSE F51 TO F60
F51 - Not used.
F52 - OPTION Diesel decongealant (20A).
F53 - Not used.
F54 - OPTION.
F55 - Engine start-up (30A).
F56 - Not used.
F57 - Not used.
F58 - Not used.
F59 - Not used.
F60 - Not used.

11 - DOOR PRESENCE SENSORS

See: 2 - DESCRIPTION: 6 - MAN-MACHINE INTERFACE (MMI)

12 - LIGHTER

13 - HANDLE FOR OPENING ENGINE HOOD

14 - SWITCH FOR LIGHTING, HORN AND INDICATORS

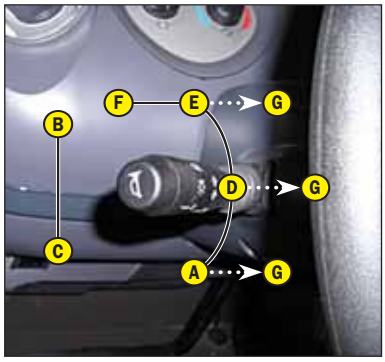

The switch controls the visual and sound alarms.

A - All lights are off, the direction indicators do not flash.
B - The right hand direction indicators flash.
C - The left hand direction indicators flash.
D - The sidelights and the rear lights are on.
E - The dipped headlights and the rear lights are on.
F - The main beam headlights and the rear lights are on.
G - Headlight signal.

Pressing the switch sounds the horn.
NOTE: The positions D - E - F - G can be carried out without the ignition being on.

15 - FRONT AND REAR WINDSCREEN WIPER SWITCH

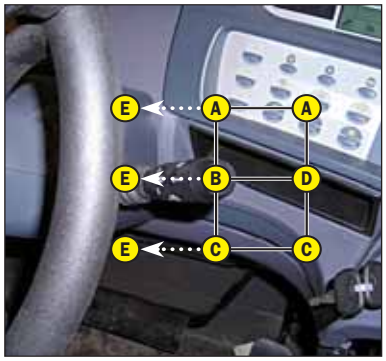

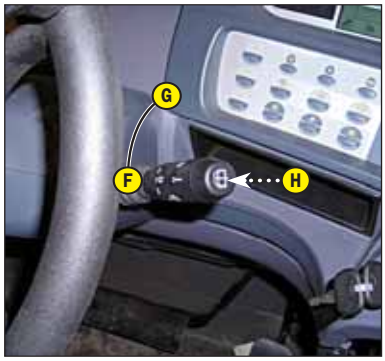

FRONT WINDSCREEN WIPER

A - Front windscreen wiper stop.
B - Slow speed for front windscreen wiper.
C - Fast speed for front windscreen wiper.
D - Front windscreen wiper intermittent control.
E - Front windscreen washer, pulse-driven.

REAR WINDSCREEN WIPER

F - Rear windscreen wiper stop.
G - Rear windscreen wiper.
H - Rear windscreen washer, pulse-driven.

16 - FUNCTION FILES

These files contain the description of the hydraulic controls and the load charts for the attachments used on the lift truck.

17 - HYDRAULIC CONTROLS

Authorization for using the hydraulic controls is given by the validation of the driver's presence (see: 2 - DESCRIPTION: 6 - MAN-MACHINE INTERFACE (MMI)) and if the conditions for using the hydraulic control are followed.

Do not attempt to alter the hydraulic system pressure by interfering with the pressure regulating valve. In the event of suspected malfunction, contact your dealer. ANY ALTERATION MAY RENDER THE WARRANTY NULL AND VOID.

Use the hydraulic controls carefully without jerking, to avoid accidents caused by shaking the lift truck.

A - Lifting and tilting control lever.
B - Telescoping control button.
C - Control selection button for stabilizers and tilting corrector.
D - Platform slewing control button.

RAISING THE PLATFORM

- The lever A backwards when lifting.
- The lever A forwards when lowering.

NOTE: When using the platform, the jib lifting angle is limited to 17°.

TILTING THE PLATFORM

- The lever A to the left for reverse tilt.
- The lever A to the right for forward tilt.

TELESCOPING

- Button B forwards for extending.
- Button B backwards for retracting.

NOTE: When completely retracting the telescopes, insistently operate the control so as to allow all the telescopes to retract fully.

NOTE: When using the platform, telescoping is limited to a length of 1m80.

MT 1840 A E3

NOTE: The telescope sections can only be fully extended if the stabilizers are lowered and bearing on the ground.

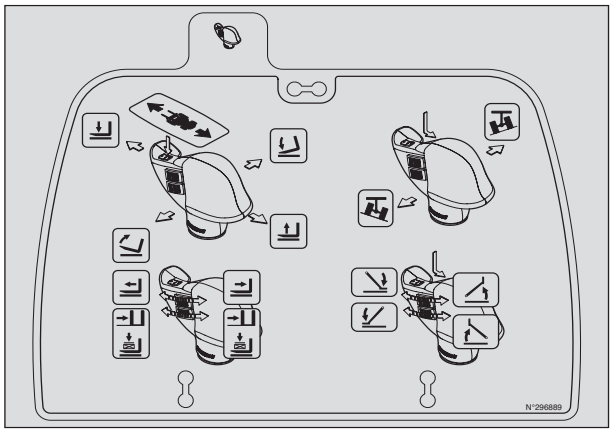

L.H. STABILIZER

- Hold button C down and move button D backwards for lifting.
- Hold button C down and move button D forwards for lowering.

R.H. STABILIZER

- Hold button C down and move button B backwards for lifting.
- Hold button C down and move button B forwards for lowering.

NOTE: The stabilizers can only be raised if the telescopic sections are retracted and the lifting angle of the jib is less than 62°.

TILTING CORRECTOR

- Hold button C down and move lever A to the left for tilting the lift truck on the left.
- Hold button C down and move lever A to the right for tilting the lift truck on the right.

NOTE: The tilt correction may only be performed if the lifting angle for the jib is less than 30°.

PLATFORM OR ATTACHMENT SLEWING

IN PLATFORM MODE

- Button D forwards to rotate to the left.
- Button D backwards to rotate to the right.

18 - ACCELERATOR PEDAL

19 - SERVICE BRAKE PEDAL

The pedal acts on the front and rear wheels by a power assisted hydraulic brake system, and allows the lift truck to be slowed down and stopped.

20 - FORWARD/NEUTRAL/REVERSE GEAR SELECTION

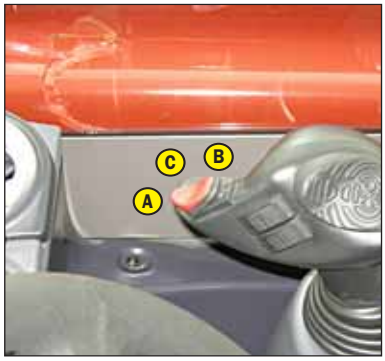

When operating this control, the lift truck should be travelling at slow speed and not accelerating.

FORWARD: Push the switch forward (position A).
REVERSE: Push the switch backward (position B). Reversing lights and an acoustic reversing alarm indicate that the lift truck is running in reverse.
NEUTRE: Parking brake applied (position C).

21 - GEAR LEVER

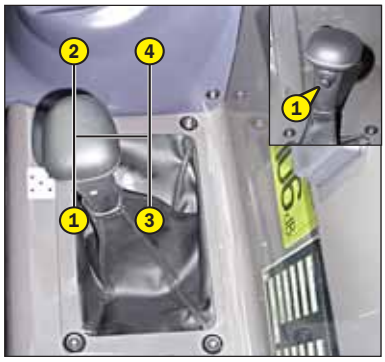

In order to change gear, it is necessary to cut the transmission by pressing button 1 on the lever.

1st gear: To the left, backwards.
2nd gear: To the left, forwards.
3rd gear: To the right, backwards.
4th gear: To the right, forwards.

CONDITION FOR USING THE TRANSMISSION GEAR RATIOS
- On these lift trucks with a torque converter, it is not necessary to automatically start up in 1st speed and progress up the gears.

The choice of transmission gear ratio should be made carefully according to the nature of the work being carried out. A poor choice may result in the extremely rapid rise of the transmission oil temperature through excessive slipping of the converter, which could lead to serious damage to the transmission (it is essential to stop and change the working conditions if the transmission oil temperature indicator light comes on). This poor choice may also result in a reduction in the lift truck's performance in forward gear. When the forward force increases, the forward speed in the r gear (for example, in 3rd gear) may be lower than the forward speed that could be obtained with the r-1 gear (in 2nd instead of 3rd).

In general, we would advise you to use the following gears according to the nature of the work being carried out.
- On the road: Set off in 3rd gear and go up to 4th if the conditions and state of the road permit it. In hilly areas, set off in 2nd gear and go up to 3rd if the conditions and state of the road permit it.
- With a trailer on the road: Set off in 2nd gear and switch to 3rd if the conditions and state of the road permit it.
- In handling mode: 3rd gear.
  2nd gear in restricted spaces.
- Earth moving: 1st gear.
- Loading (reclaiming with bucket, manure fork, etc.): 2nd gear.

22 - STEERING SELECTION

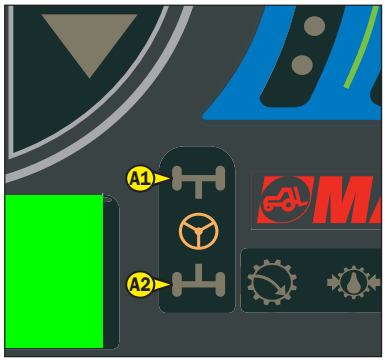

A - GREEN WHEEL ALIGNMENT LAMPS
These lamps come on to indicate the alignment of the wheels in relation to the lift truck. Lamp A1 for the front wheels and lamp A2 for the rear wheels.

Before selecting one of the three possible steering positions, bring all 4 wheels into alignment with regards to the lift truck axle. Never change the steering mode whilst driving.

B - STEERING SELECTION LEVER

B1 - Front drive wheels (highway traffic).

B2 - Front and rear drive wheels in opposite direction (short steering lock).

B3 - Front and rear drive wheels in the same direction (crab steering).

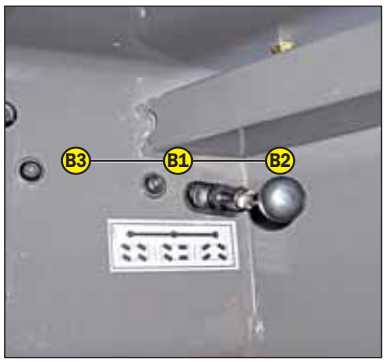

CONTROL FOR ALIGNMENT OF THE WHEELS
- Shift the steering selection lever B into position B2 (short steering lock).
- Turn the steering wheel and bring the rear wheels into alignment until lamp A2 lights up.
- Shift the steering selection lever B into position B1 (highway traffic).
- Turn the steering wheel and bring the front wheels into alignment until lamp A1 lights up.

Before driving on roads, it is necessary to check the alignment of the rear wheels and to drive in front wheel steer. The control of the alignment of the rear wheels must be regularly done with the help of the green lamps, while driving the lift truck. In case of anomalies, consult your dealer.

23 - HEATER CONTROL

A - FAN CONTROL
This 3-speed control allows the air to be ventilated through the air vents.

B - TEMPERATURE CONTROL
Allows the temperature inside the cab to be adjusted.
B1 - The fan pumps in the air at ambient temperature.
B2 - The fan pumps in warm air.
The intermediate positions allow the temperature to be adjusted.

23 - AIR CONDITIONING CONTROLS (OPTION AIR CONDITIONING)

The air conditioning only works if the lift truck has been started up. When using your air conditioning unit you must work with the cab closed.
In winter: So as to ensure correct operation and complete efficiency of the air conditioning unit, start up the compressor once a week, if only for a short spell, so as to lubricate the internal seals.
In cold weather: Warm the I.C. engine before switching on the compressor, so as to allow the coolant that has collected in a liquid state at the lowest point of the compressor circuit to turn into gas under the effect of the heat given off by the I.C. engine, as the compressor is liable to be damaged by coolant in a liquid state.

If your air conditioning does not seem to be working regularly, have it examined by your dealer (see: 3 - MAINTENANCE: F - EVERY 2000 HOURS OF SERVICE. Never try to repair any anomalies yourself.

A - FAN CONTROL
This 3-speed control allows the air to be ventilated through the air vents.

B - TEMPERATURE CONTROL
Allows the temperature inside the cab to be adjusted.
B1 - The fan pumps in cold air.
B2 - The fan pumps in warm air.
The intermediate positions allow the temperature to be adjusted.

C - AIR CONDITIONING CONTROL
This control with a pilot light allows the air conditioning unit to be switched on.

HEATING MODE
The controls must be adjusted in the following way:
C - Control with pilot light off.
B - At the required temperature.
A - At the desired speed: 1, 2 or 3.

CONDITIONED AIR MODE
The controls must be adjusted in the following way:
C - Control with pilot light on.
B - At the required temperature.
A - At the desired speed: 1, 2 or 3.

DEMISTING MODE
The controls must be adjusted in the following way:
C - Control with pilot light on.
B - At the required temperature.
A - At speed 2 or 3.
For optimum effectiveness, close the heating ventilators.

24 - HEATING VENTS

These swiveling heating vents, which can be shut off, allow you to direct and adjust the flow rate inside the cab.

25 - DEMIST VENTS

These vents allow the front windscreen and side windows to be demisted. For optimum efficiency, shut off the heating vents.

26 - LEVEL INDICATORS

A - TILT INDICATOR
When the two marks are aligned, the chassis is parallel with the front axle.

B - SPIRIT LEVEL
Enables the operator to check that the lift truck is in the horizontal position.

27 - DOOR OPEN LEVER

28 - DOOR CLOSE HANDLE

29 - WINDOW REGULATOR SWITCH

30 - SIDE STORAGE SPACE

31 - ROOF LIGHT

32 - HANDLE FOR REAR WINDOW OPENING

EMERGENCY EXIT
Use the rear window as an emergency exit, if it is impossible to leave the cab by the door.

33 - HANDLE FOR REAR WINDOW CLOSING

34 - STEERING WHEEL ADJUSTMENT LEVER

This handle enables the angle and height of the steering wheel to be adjusted.

- Pull the knob 1 backwards.
- Adjust the steering wheel to the desired position.
- Push the knob back to lock the steering wheel in position.

35 - DOCUMENT HOLDER NET

Make sure that the operator's manual is in the right place, i.e. in the document holder net.
NOTE: An OPTION waterproof document-holder exists.

36 - STORAGE COMPARTMENT

37 - ASHTRAY

38 - FRONT HEADLIGHTS

A - Left front indicator.
B - Left front dipped headlight.
C - Left front main beam.
D - Left front sidelight.
E - Right front indicator.
F - Right front dipped headlight.
G - Right front main beam.
H - Right front sidelight.

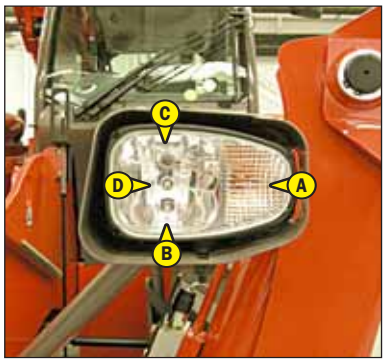

39 - REAR LIGHTS

A - Left rear indicator.
B - Left rear stoplight.
C - Left tail light.
D - Rear fog light.
E - Rear reversing light.
F - Right tail light.
G - Right rear stoplight.
H - Right rear indicator.

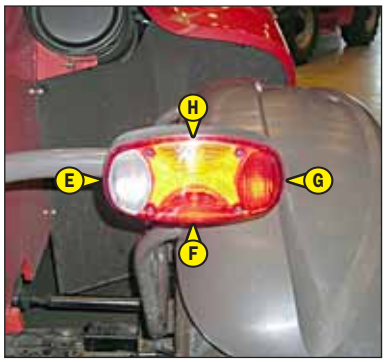

40 - REVOLVING LIGHT

The magnetic revolving light must be clearly visible on the roof of the cab and plugged-in to socket 1.

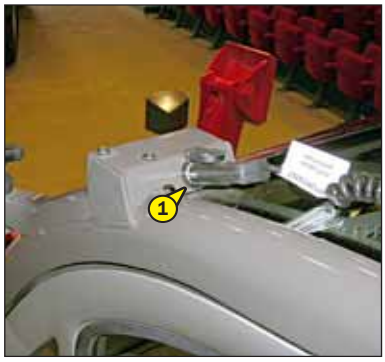

41 - INSIDE REAR-VIEW MIRROR (OPTION)

42 - TRUCK/PLATFORM SELECTOR SWITCH

Handling or platform operation from driver's cab controls.

Platform operation from control console.

OPTION Radio-control.
Handling mode operation using the radio-control.

43 - CONTROL CONSOLE

When the control console is not in use, always disconnect it and store it in the space provided behind the driver's seat.

Before using the control console, you must check, that each function performs the expected action on the lift truck. If any faults are noted during testing or at any other time, immediately shut-down the lift truck and prevent it from being used. Inform the manager responsible for the lift truck in order to have the fault repaired as quickly as possible.

Safety inspections must be carried out at least once a day, before starting work and at each change of operator.
See: 2 - DESCRIPTION: OPERATING THE PLATFORM for the operation of the control console.

44 - RESCUE SWITCH

See: 2 - DESCRIPTION: OPERATING THE PLATFORM.

45 - DEAD-MAN BUTTON IN RESCUE MODE

See: 2 - DESCRIPTION: OPERATING THE PLATFORM.

46 - RADIO-CONTROL (OPTION)

46A - RADIO-CONTROL TRANSMITTER (OPTION)
46B - RADIO-CONTROL RECEIVER (OPTION)

The transmitter and the receiver must not be used without an antenna at the risk of damaging them.

When the radio-control transmitter is not in use, always disconnect it, swirtch it off and remove the key switch. Store the radio-control transmitter in the space provide behind the driver's seat.

Before using the radio-control, you must carry out the following safety checks. If any faults are noted during testing or at any other time, immediately shut-down the lift truck and prevent it from being used. Inform the manager responsible for the lift truck in order to have the fault repaired as quickly as possible.

Safety inspections must be carried out at least once a day, before starting work and at each change of operator.

VISUAL INSPECTION
- Are the hand-guard frame protection devices installed and in good condition?
- Are any parts cracked or broken?
- Are the manipulator bellows and switch sealing boots free of perforations and cracks?

RADIO-CONTROL SAFETY INSPECTION AND START-UP
- Check that each function of the transmitter manipulators corresponds to the expected action on the lift truck.
- Check and test the “Emergency stop” function, press the emergency stop button on the transmitter, the IC engine must stop.

Never work with a lift truck that does not have a properly working “Emergency stop” function. Failure to follow these instructions may result in injury or material damage. Any measures that contribute to altering the above instructions may result in the loss of your operating authorisation and the equipment guarantee.

See: 2 - DESCRIPTION: USING THE RADIO-CONTROL FOR HANDLING for the operation of the radio-control.

46C - RADIO-CONTROL BATTERY (OPTION)

The radio-control is supplied with two interchangeable batteries in order to always have a charged battery available.

Always use a recharged battery and check that the other battery is on the charger before using the radio-control (leaving a battery in the charger with the green light flashing will not damage either the charger or the battery).

CHANGING THE BATTERY

Make sure that there is not dirt in the transmitter battery housing, as well as on the 4 contacts, as this could cause a faulty electrical connection.

The transmitter’s electronics constantly monitor the battery voltage. When it reaches certain level, an intermittent sound signal will be emitted by the transmitter approximately 10 minutes before radio transmission is switched off. Beyond that time, the transmitter will switch off, immobilising the lift truck.
- Turn the transmitter’s key switch to the stop position, remove the discharged battery by pushing it in horizontally by its tab, then lifting it slightly and allowing it to be pushed out of the battery compartment by the springs of the contacts.
- Take the charged battery (battery charger green light flashing), and place it in the transmitter battery compartment, checking that it is properly positioned.
- You can then restart the radio-control transmitter.

CHARGING A BATTERY

Explosion hazard! Only use the OEM chargers and batteries supplied with the lift truck. Failure to comply may result in an explosion. The chemical products and items released by the battery may cause injury.

The battery charger comprises a charge processor which controls the charging process. The following battery parameters are taken into account:
- charging current
- charging time
- voltage
- state of charge
- short-circuit monitoring on contacts.

- Insert the discharged battery by pushing it in by its tab, and pushing slightly before allowing it to come back out, pushed by the springs of the battery compartment contacts.
- The battery charger’s green lamp will then remain continuously on while charging is in progress.
- After approximately 4 hours, charging will be completed and the charger’s green lamp will begin to flash.

Rechargeable batteries are special waste products and must be treated as such! Give them to a specialist company for disposal. Never throw batteries in the dust bin or in the environment!

In order to prolong battery life, it is recommended to only charge them when they can be considered to be empty, i.e., when the transmitter sound device emits its intermittent signal.

USING THE PLATFORM

A - ATTACHING THE PLATFORM TO THE LIFT TRUCK
B - HYDRAULIC CONNECTION OF THE PLATFORM TO THE LIFT TRUCK
C - LEVELLING THE LIFT TRUCK AND THE PLATFORM
D - DEPLOYING THE EXTENDABLE PLATFORM
E - USING THE CONTROL CONSOLE
F - REMOVING THE PLATFORM
G - RESCUE PROCEDURE
H - MANUAL FAULT FINDING PROCEDURE

Installation of the platform on the lift truck is only possible if the "platform operation" plates of the lift truck and the platform are identical.

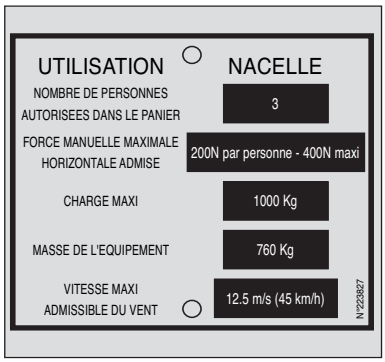

A - ATTACHING THE PLATFORM TO THE LIFT TRUCK

- Check that the locking pin and the clip are in position in the bracket (fig. A1).
- Place the lift truck with the jib lowered in front of and parallel to the platform and tilt the table forwards.
- Bring the carriage under the platform fixing bolts, slightly raise the jib, incline the carriage backwards in order to position the platform.
- Raise the platform off the ground to facilitate locking.
- Take the locking pin on the bracket (fig. A1) and lock the attachment (fig. A2). If necessary, relieve the platform presence detection mechanism 1 (fig. A3) to assist the insertion of the locking pin. Do not forget to place the cotter pin (fig. A2).
- Raise the platform mounting prop 2 (fig. A4).

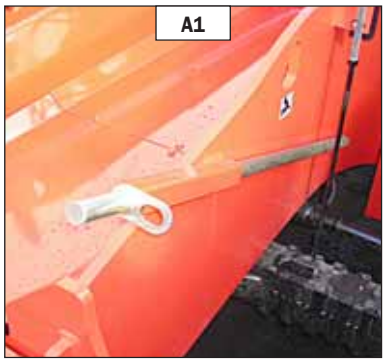
A1

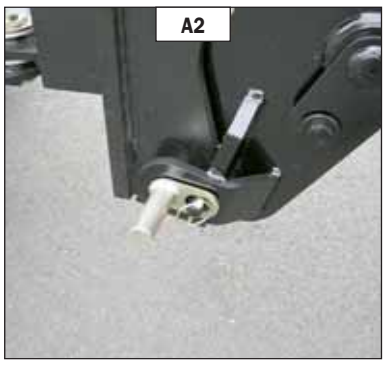
A2

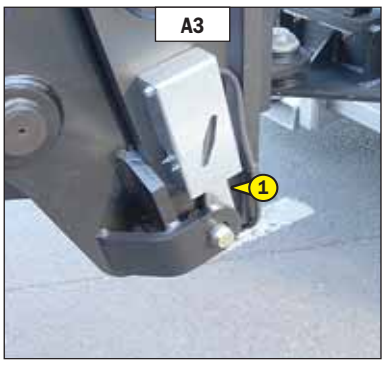

A3

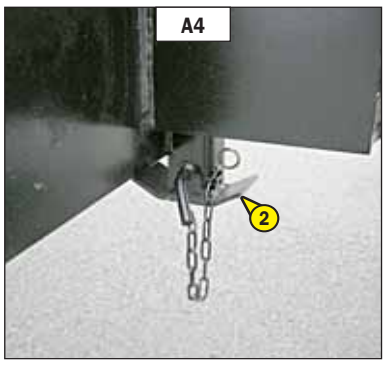

A4

B - HYDRAULIC CONNECTION OF THE PLATFORM TO THE LIFT TRUCK

- Stop the I.C. engine and keep the ignition on the lift truck.
- Release the pressure from the hydraulic platform slewing circuit.
- Connect the platform rotation hydraulic hoses 1 (fig. B1) to the jib head as dictated by the foolproofing devices 2 (fig. B1).

Make sure that the rapid connectors are clean and protect the holes which are not used, with the caps provided.

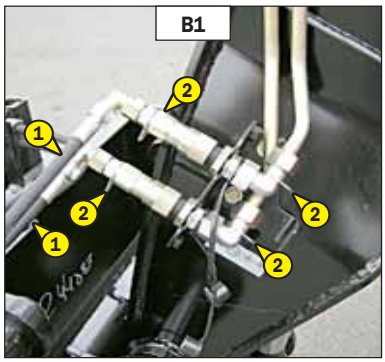

B1

C - LEVELING THE LIFT TRUCK AND THE PLATFORM

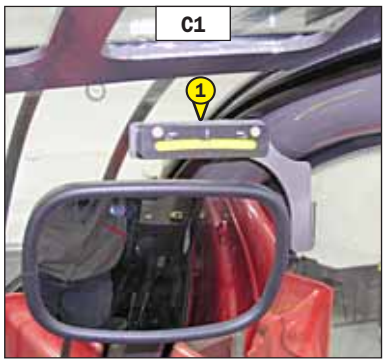

LEVELLING THE LIFT TRUCK

- Start-up the lift truck, lift the platform approximately 30 cm from the ground and take it to its point of use.

Place the lift truck in its working area, in accordance with the operating and safety instructions given in the lift truck operator's manual.

- Set the forward/reverse selector to neutral.
- Leave the I.C. engine running idle.
- Level the lift truck in the transverse direction using the tilting corrector and check the horizontality of the spirit level 1 (fig. C1).
- Bring the two stabilisers into contact with the ground.
- Lift the two front wheels of the lift truck.
- If the help screen NOK appears on the screen display, correct the tilt by adjusting the stabilisers until the help screen is displayed OK, accompanied by a short beeping sound.

If the ground is not stabilised, securely wedge the stabilisers.

LEVELLING THE PLATFORM

- Before operating the platform, check and correct the front to back inclination of the platform and set the floor approximately 30 cm above the ground.

D - DEPLOYING THE EXTENDABLE PLATFORM

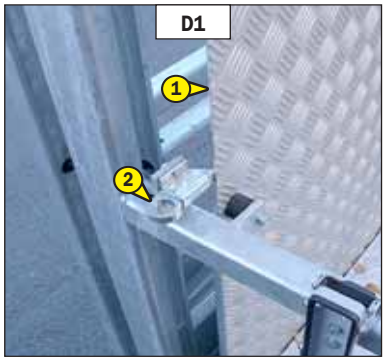

FOLDING DOWN

To avoid the flooring pieces 1 (fig. D1) falling, check that they are properly secured by the locking bolts 2 (fig. D1).

- Remove the clip 3 (fig. D2) and withdraw the lock pin 4 (fig. D2) (2 pins on each side of the platform).
- Fold out the mobile sides and lock them with the pins and clips 5 (fig. D3) (6 pins and clips on each side of the platform).
- Hold the decking with the handle 6 (fig. D4), pull the bolt 7 (fig. D4) and lower the flooring into the working position.
- Check that the floor locking bolt 8 (fig. D5) is properly engaged.
- Perform the same operations on the other extension.
- The platform is now ready for use.

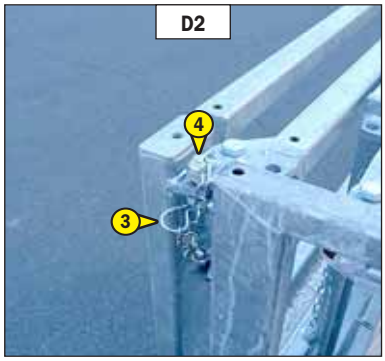

FOLDING UP

- Proceed in reverse order to unfolding.

It is recommended to fold up the platform when moving the lift truck. Beware of the risk of pinching the fingers when folding back the extensions.

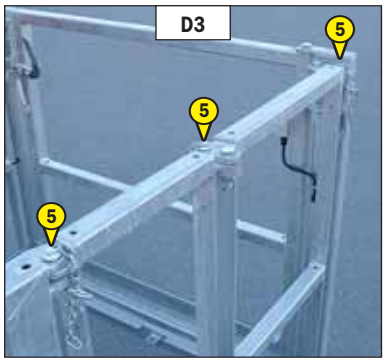

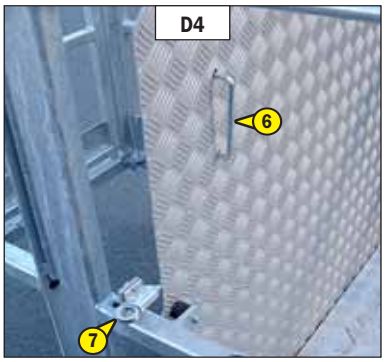

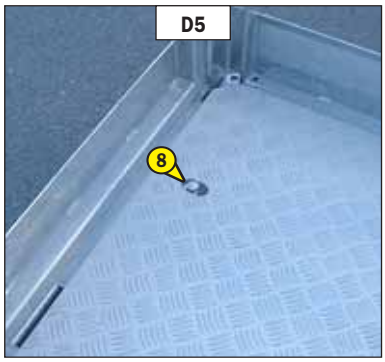

E - USING THE CONTROL CONSOLE

- Turn the TRUCK/PLATFORM selector switch 1 (fig. E1) , which will shut down the IC engine.
- Take the control console from the cab and mount it on the platform (fig. E2).
- Pass the cable through the rings 2 (fig. E3).
- Connect the cable 3 (fig. E4) from the console to the socket 4 (fig. E4) at jib head.
- Connect the safety cable 5 (fig. E5) to the control console. All the lamps will light and a beep will sound for 1 second to confirm that the console is switched on.
- Open the gate by lifting the latch 6 (fig. E6), pushing and holding the lever 7 (fig. E6), then pushing the gate towards the inside of the platform.
- Climb into the platform.
- Close the gate while pushing the latch 6 (fig. E6), then release the lever.
- Read and follow the safety instructions displayed in the platform.
- Attach the safety harness(es) to the rings 9 (fig. E7) provided.
- Before starting the IC engine, ensure that the emergency stop switches 10 (fig. E8) and 11 (fig. E9) are disabled.
- The control console is now ready for operation.

A supervisor MUST be present on the ground while the platform is in use.

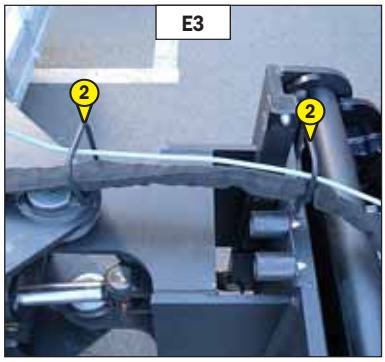

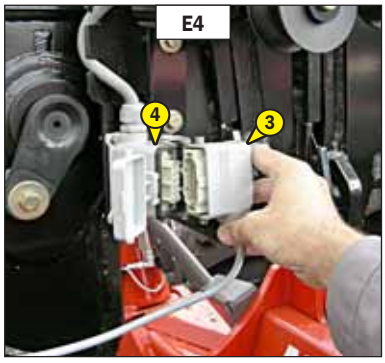

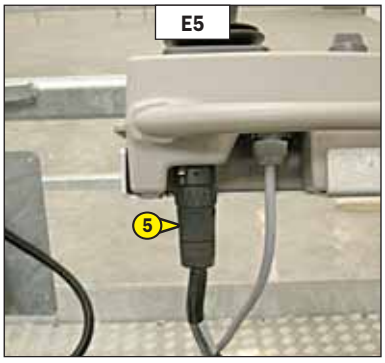

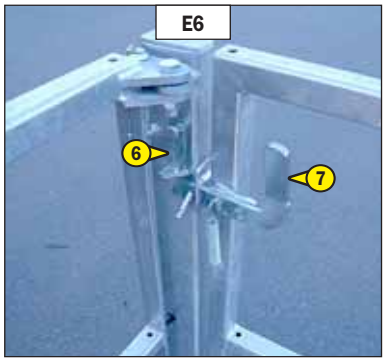

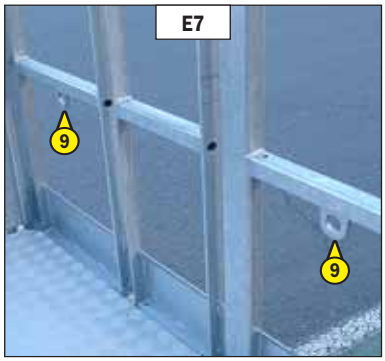

DESCRIPTION OF THE CONTROL CONSOLE

IC ENGINE START-UP

IC ENGINE SHUT-DOWN

HORN
Operates the lift truck's horn when needed.

A - HYDRAULIC MOVEMENT SELECTOR
Press the trigger to increase the IC engine speed before performing the hydraulic movement.

JIB MOVEMENTS
Lever 1 backward to lift.
Lever 1 forwards to lower.
Lever 1 to the right to extend.
Lever 1 to the left to retract.

PLATFORM MOVEMENTS
Lever 1 backwards to move sideways to the right (OPTION).
Lever 1 forwards to move sideways to the left (OPTION).
Lever 1 to the right to rotate to the right.
Lever 1 to the left to rotate to the left.

FUEL LEVEL
A continuously lit orange lamp and a slow intermittent beeping sound indicate that the fuel level is low.

PLATFORM PRESENCE
A flashing red lamp and a fast intermittent beeping sound indicate a fault on the attaching platform. Check the locking pin.

GATE
A flashing red lamp and a fast intermittent beeping sound indicate a fault on the gate. Check that it is properly closed.

TILT
A continuously lit red lamp and a continuous beeping sound indicate that the longitudinal and/or transverse tilt of the lift truck is too great (subsidence of the ground) and the following movements are inhibited:
- Raising and extending the jib.

All other movements remain available. You must return the platform to the transport position and correct the fault by using the hydraulic controls in the cab.

OVERLOAD OF LIFT TRUCK
PLATFORM OVERLOAD
A continuously lit red lamp and a continuous beeping sound indicate that the lift truck is at its maximum permitted load and all "AGGRAVATING" movements are inhibited:
- Lowering and retracting the jib.

All other movements remain available.

PLATFORM OVERLOAD
A continuously lit red lamp and a continuous beeping sound indicate that the platform is overloaded and must be lightened.

FAULT
FAULTY LINK
A flashing red lamp and a fast intermittent beeping sound indicate that the link with the control console is cut. Check the connection of the control console and restart the IC engine. If the symptoms persist, consult your dealer.
LIFT TRUCK FAULT
A flashing red lamp and a slow intermittent beeping sound indicate a major fault on the lift truck. Immediately lower the platform to the ground, stop the IC engine and consult your dealer.
IC ENGINE SHUT-DOWN
A continuously lit red lamp immediately stop the IC engine. You must use the manual breakdown procedure to lower the platform to the ground. Once this is done, consult your dealer.

EMERGENCY STOP BUTTON
In case of danger, the emergency stop button 2 stops the IC engine and thus stops all hydraulic movements. After the emergency stop, the button is turned to release it.
NOTE: Operate the horn to reinitialise the control console before restarting the lift truck.

Be careful not to stop hydraulic movements suddenly when you use this button. It is only to be used for emergency stops or functional testing.

F - REMOVING THE PLATFORM

Perform the previous operations (A - B - C - D - E) in reverse order, in accordance with the following instructions:
- Return the control console or remote-control in the lift truck cab.
- Place the safety cable in its housing.
- Set the TRUCK/PLATFORM selector switch 1 (fig. F1) to .
- Store the platform flat on the ground with the support leg in place (fig. F2).

Be sure to store the platform in a place where it will not obstruct the work of others.

G - RESCUE PROCEDURE

THE PERSON ON THE GROUND MUST TAKE-OVER THE PLATFORM CONTROLS AS INDICATED BELOW:

- Remove the lead seal from the rescue key 1 (fig. G1),insert it in the rescue switch 2 (fig. G2) and turn the key to SOS.

After turning the key to rescue mode, THE IGNITION MUST BE SWITCHED OFF BEFORE RESTARTING THE LIFT TRUCK. This operation will validate the lift truck in rescue mode.

- This will allow the IC engine to be restarted with the platform's emergency stop button engaged, and to recover the following hydraulic movements using the lift truck's controls.
  - Retraction of the jib.
  - Raising and lowering of the jib.
  - Slewing of the platform.
- Press the dead-man button 3 (fig. G3) and hold it down while performing hydraulic movements.

When the rescue procedure is used following a pressure switch fault on the stabilisers, the jib must be first be retracted before lowering the platform.

Once the rescue procedure is completed, turn the key in the other direction, remove it, then contact your dealer to re-seal it in position.

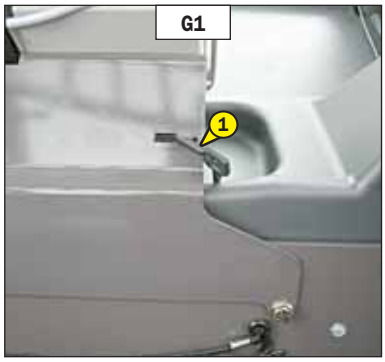

H - MANUAL FAULT FINDING PROCEDURE

IN THE EVENT OF A BREAKDOWN OR FAULT THAT PREVENTS RESTARTING HYDRAULIC MOVEMENTS FROM THE LIFT TRUCK CONTROLS, THE PLATFORM CAN BE LOWERED TO THE GROUND MANUALLY AS FOLLOWS:

- Switch on lift truck ignition.
- Lift up protective casing 1 (fig. H1).
- Disconnect the electrical connections 2 (fig. H2) to each distributor, by pulling the latch upwards. The green indicator lamp 3 (fig. H2) must go out on each distributor head.
- Take the breakdown repair kit 4 (fig. H3) comprising an extension lead and an open-end wrench.

MT 1440 A E3

- Disconnect the plug 5 (fig. H4) on the valve of the distributor inlet component 6 (fig. H4), and connect the extension lead 7 (fig. H4) in its place.

MT 1840 A E3

- Disconnect the shunt 8 (fig. H4) from the valve of the distributor inlet component, and connect the extension lead 7 (fig. H4) in its place.

- Then plug the extension lead into the cigar lighter or the rotating light socket.
- Use the wrench to free the hand-pump lever (fig. H5), and install it on the pump (fig. H6).
- Using the same wrench, select and block the position of the slide on the distributor's manual controls (fig. H7).
  - A1: Telescope retraction.
  - A2: Telescope extension.
  - B1: Jib lowering.
  - B2: Jib raising.
- Select the hydraulic movement to be actuated and operate the hand pump until the platform is in the transport position (platform 30 cm above the ground with the jib retracted).
- At the end of the procedure, retrieve the wrench from the distributor and stow away the lever and the hand pump (fig. H5).
- Reconnect the electrical connections 2 (fig. H2), the inlet component valve (fig. H4) and put away the breakdown kit 4 (fig. H3).
- Put the protective guard back 1 (fig. H1).

H1

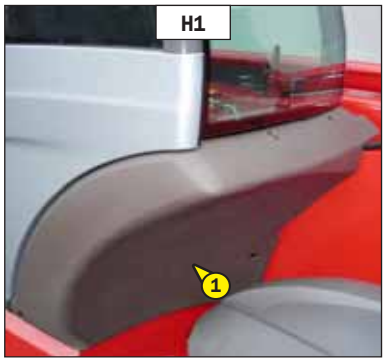

H2

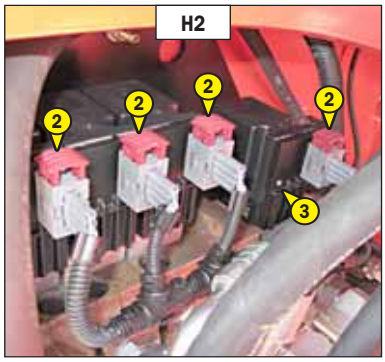

H3

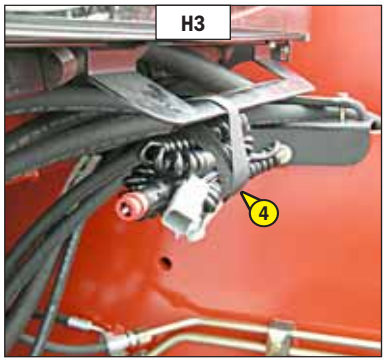

MT 1440 A E3

H4

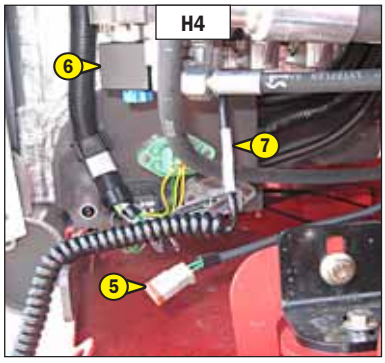

MT 1840 A E3

H4

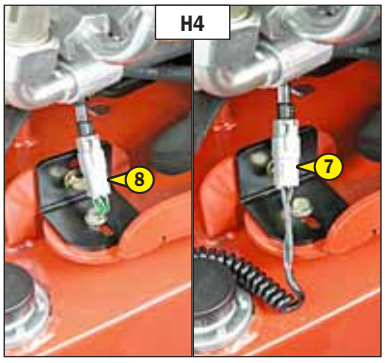

H5

H6

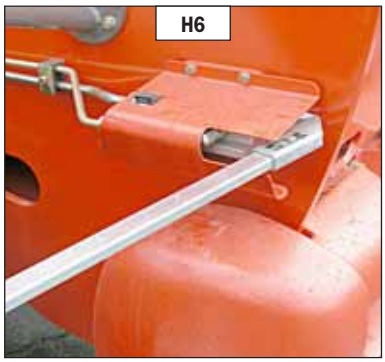

H7

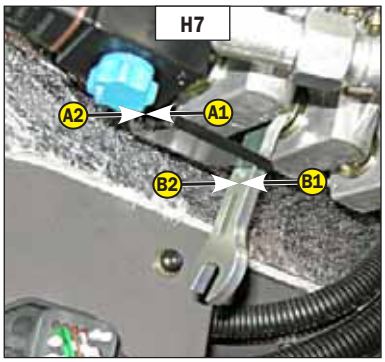

USING THE RADIO-CONTROL FOR HANDLING (OPTION)

Place the lift truck in its working area, in accordance with the operating and safety instructions given in the lift truck operator's manual.

- Set the forward/reverse selector to neutral.
- Leave the I.C. engine running idle.
- Level the lift truck in the transverse direction using the tilting corrector and/or the stabilizers and check the horizontality of the spirit level 1 (fig. A1).
- Set the TRUCK/PLATFORM selector switch 2 (fig. A2) to , which will shut down the IC engine.
- Take the radio-control transmitter from behind the driver's seat and wear it correctly (fig. A3).
- Connect the handling plug 3 (fig. A3) to the radio-control transmitter.
- Before starting the IC engine, ensure that the emergency stop switches 4 (fig. A4) and 5 (fig. A3) are disabled.
- The remote control is now ready to operate.

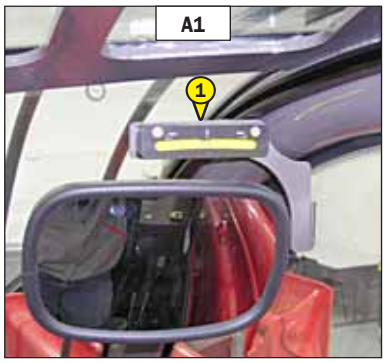

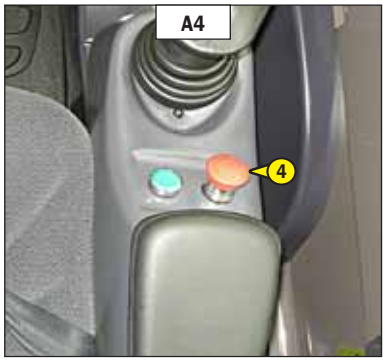

STARTING THE IC ENGINE

- Turn the key switch A in the right direction without forcing it. It can only be pulled back out in position "0".
- Turn to position "I". Two self-test audible signals and the green indicator light B flashing indicate correct operation of the radio control.

IMPORTANT: Wait for the end of the two audible self-test signals before initializing the radio control.

- Initialise the radio control by pressing button C, the horn on the lift truck sounds at the same time.
- Start the engine with switch D. Once started, the revolving light remains continuously lit.

OVERLOAD OF LIFT TRUCK

An intermittently sounding horn (1 second/5 seconds, etc.), indicates that the lift truck is at its maximum permitted load and all "AGGRAVATING" movements are inhibited:

- Lowering and retracting the jib.

All other movements remain available.

DESCRIPTION OF THE RADIO-CONTROL

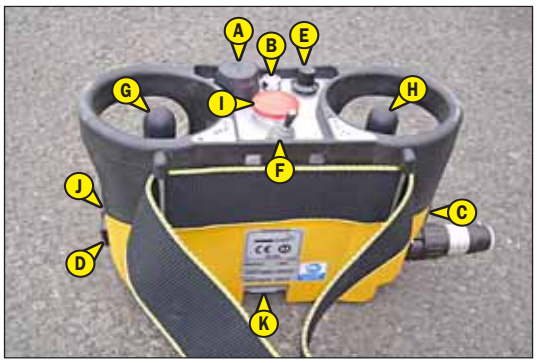

A - KEY SWITCH

B - GREEN LAMP
A flashing green lamp indicates that the radio-control is operating correctly.
A very rapidly flashing green lamp indicates one of the following:
- that the link between the transmitter and receiver has been interrupted (the engine stops automatically),
- an emergency stop,
- a transmitter fault.

C - INITIALISATION BUTTON
Initialise the radio-control after switching on or after an emergency stop.

D - IC ENGINE START-UP BUTTON

E - IC ENGINE SPEED SELECTOR
: Idle speed, the selector must be in this position to start the IC engine.
: Fast.

F - HYDRAULIC MOVEMENT SELECTOR
G, H - HYDRAULIC MOVEMENT CONTROLS
LIFTING THE LOAD
- With selector F in position I, move lever H to the left to raise.
- With selector F in position I, move lever H backwards to lower.

TILT OF CARRIAGE
- With selector F in position I, move lever H to the left to excavate.
- With selector F in position I, move lever H to the right to tip.

TELESCOPING
- With selector F in position I, move lever G forwards to extend.
- With selector F in position I, move lever G backwards to retract.

ATTACHMENT
- With selector F in position I, move lever G to the right or left to operate the attachment.

ATTACHMENT CIRCUIT IN CONTINUOUS MODE
- With selector F in position I, set the desired hydraulic flow rate by holding lever G to the right or left.
- Press the initialisation button C for 3 seconds to validate continuous mode and the hydraulic flow rate.
- Move lever G to the right or the left, or press initialisation button C, or switch off the I.C engine to stop continuous mode.

OPTION JIB HEAD ELECTROVALVE
- With selector F in position II, moving lever G to the right or left to control another hydraulic function.

I - EMERGENCY STOP
In case of danger, the emergency stop button stops the IC engine and thus stops all hydraulic movements. Pull the button to disable and reinitialise radio-control before restarting the lift truck.

Be careful not to stop hydraulic movements suddenly when you use this button. It is only to be used for emergency stops or functional testing.

J - IC ENGINE STOP BUTTON

K - ACCUMULATOR
See: 2 - DESCRIPTION: INSTRUMENTS AND CONTROLS for replacing the accumulator.

TOWING PIN AND HOOK

Located at the rear of the lift truck, this device is used to attach a trailer. Its capacity is limited for each lift truck by the authorized gross vehicle weight, tractive effort and maximum vertical force on the coupling point. This information is given on the manufacturer's plate fixed to each lift truck (see: 2 - DESCRIPTION: IDENTIFICATION OF THE LIFT TRUCK).

- To use a trailer, see current regulations in your country (maximum running speed, braking, maximum weight of trailer, etc.).
- Verify the trailer's condition before using it (tyre condition and pressures, electrical connection, hydraulic hose, brake system…).

Do not tow a trailer or attachment which is not in perfect working order. Using a trailer in poor condition may affect the lift truck's steering and braking, and hence safety.

If a third party helps in coupling or uncoupling the trailer, this person must be permanently visible to the driver and wait until the lift truck has stopped, the handbrake is on and the I.C. engine is switched off before performing the operation.

NOTE: There is an OPTIONAL rear-view mirror which allows the lift truck to be approached more closely to the trailer ring.

A - TOWING PIN

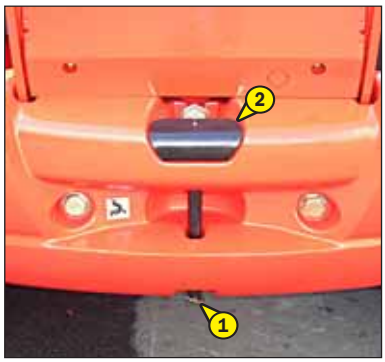

COUPLING AND UNCOUPLING THE TRAILER
- To couple the trailer, position the lift truck as close as possible to the trailer ring.
- Switch off the I.C. engine.
- Remove the pin 1, lift the trailer pin 2 and place or remove the trailer ring.

Be careful not to get your fingers caught or crushed during this operation.
Do not forget to put pin 1 back in place.
When uncoupling, make sure that the trailer is supported independently.

B - ADJUSTABLE PROJECTING HOOK (OPTION)

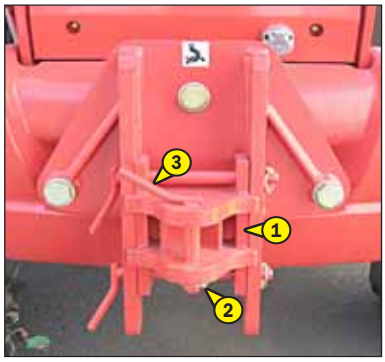

COUPLING AND UNCOUPLING THE TRAILER
- To couple the trailer, position the lift truck as close as possible to the trailer ring.
- Switch off the I.C. engine.
- Set the coupling fitting 1 according to the height of the trailer ring.

Do not forget to put rods and pin back in place.

- Remove pin 2, lift the trailer pin 3 and place or remove the trailer ring.

Be careful not to get your fingers caught or crushed during this operation.
Do not forget to put pin 2 back in place.
When uncoupling, make sure that the trailer is supported independently.

C - REAR ELECTRIC SOCKET (OPTION)

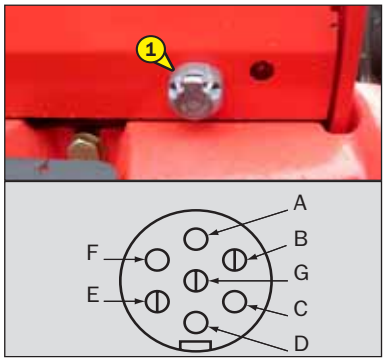

- Connect the male plug to the female socket 1 on the lift truck and make sure the lights of the trailer or the light bar are working properly.
  - A - Left rear indicator.
  - B - OPTION Rear fog lights.
  - C - Earth.
  - D - Right rear indicator.
  - E - Right tail light.
  - F - Rear stoplight.
  - G - Left rear light + number plate.

DESCRIPTION AND USE OF THE OPTIONS

1 - NUMBER PLATE LIGHTING
2 - PREHEATING ELEMENT
3 - FINTRONIC ANTI-START SYSTEM
4 - MODCLE ANTI-START SYSTEM
5 - ANGULAR SECTOR ON JIB
6 - EXTERIOR DRAIN-BACK
7 - HYDRAULIC ATTACHMENT LOCKING
8 - JIB HEAD ELECTROVALVE
9 - JIB HEAD ELECTROVALVE + HYDRAULIC ATTACHMENT LOCKING
10 - SINGLE SIDE-SHIFT CARRIAGE (TSDL)
11 - SINGLE OR DUAL EFFECT REAR HYDRAULIC CONTROL PREDISPOSITION
12 - LIFTING RING ON SINGLE CARRIAGE

1 - NUMBER PLATE LIGHTING

2 - PREHEATING ELEMENT

Enables the engine to be kept warm during prolonged periods of stoppage and thus improves engine starting.

SUPPLY CHARACTERISTICS OF PREHEATING SYSTEM:
- Rated range of power: 220-240V; 50-60Hz
- Current consumed: 4,5A
- Equipment in class 1
- Equipment connectable only on feeder circuit TT or TN
- Category of insulation 2

ENVIRONMENTAL CONDITIONS FOR USE:
- Maximum ambient temperature for using preheating: +25°C
- Pollution level 2

CONDITIONS FOR CONNECTION AND USE OF PREHEATING:
- The preheating system should not be used for an external ambient temperature higher than + 25°C.
- It is essential that the power supply to the preheating system is:
  - Effected with a cable that conforms to the installation standards in force and contains a protective earth conductor.
  - Contains an appropriate sectioning system.
  - Incorporate an appropriate safety system against short circuits (fuses or circuit breaker) and a differential circuit breaker with 30 mA sensitivity.
- Only connect to and disconnect from the power supply while the unit is off and the I.C. engine is stopped.

3 - FINTRONIC ANTI-START SYSTEM

OPERATION
- Switch on the lift truck and set the black key A next to the antenna B (maximum 80 mm).
- Wait a few seconds for red LED C to go out before starting the lift truck.

NOTE: You can restart the lift truck within 20 seconds of stopping it: after this time, the anti-start system reacts and red LED C flashes.

4 - MODCLE ANTI-START SYSTEM

OPERATION
- Switch on lift truck ignition, red led 1 will flash.
- Apply key 2 to its base 3, and withdraw the moment the system emits a continuous beep, and led 1 turns green.
- Start the lift truck within the next 20 seconds; otherwise the anti-theft system will be reactivated and red led 1 will flash.

NOTE: You can restart the lift truck within 20 seconds of stopping it: after this time, the anti-start system reacts and red LED C flashes.

5 - ANGULAR SECTOR ON JIB

The angular sector displays the jib angle, and thus improves the reading of the load charts.

MT 1440 A E3

MT 1840 A E3

6 - EXTERIOR DRAIN-BACK

Enables connection of an attachment for which drain-back is required.

MT 1440 A E3

A - Fixed position, drain back not connected.
B - Movable position, drain back connected.

MT 1440 A E3

MT 1840 A E3

7 - HYDRAULIC ATTACHMENT LOCKING

Enables the attachment to be locked onto the carriage and a hydraulic attachment to be used by the same hydraulic circuit.

ATTACHMENT LINE CONTROL
- Set valve 1 to position A.
- Push button 2 forward or backward.

ATTACHMENT LOCKING CONTROL
- Set valve 1 to position B.
- Push button 2 forward to lock the attachment and backward to release it.

Once the attachment is locked, return valve 1 to position A to prevent accidental release of the attachment.

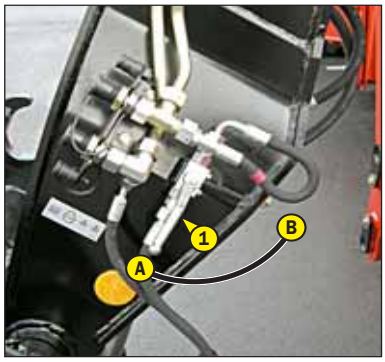

8 - JIB HEAD ELECTROVALVE

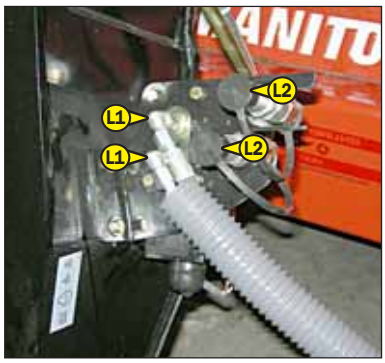

Enables use of two hydraulic functions on the attachment circuit.

ATTACHMENT LINE L1 CONTROL
- Push button 1 forward or backward.

ATTACHMENT LINE L2 CONTROL
- Hold down button 2 and push button 1 forwards or backwards.

9 - JIB HEAD ELECTROVALVE + HYDRAULIC ATTACHMENT LOCKING

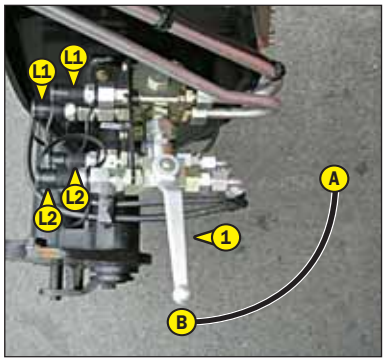

The addition of these two options on the attachment line allows two hydraulic functions to be used and locks the attachment onto the carriage.

ATTACHMENT LINE L1 CONTROL
- Set valve 1 to position A.
- Push button 2 forward or backward.

ATTACHMENT LINE L2 CONTROL
- Set valve 1 to position A.
- Hold down button 3 and push button 2 forwards or backwards.

ATTACHMENT LOCKING CONTROL
- Set valve 1 to position B.
- Hold down button 3 and push button 2 forward to lock the attachment and backward to release it.

Once the attachment is locked, return valve 1 to position A to prevent accidental release of the attachment.

10 - SINGLE SIDE-SHIFT CARRIAGE (TSDL)

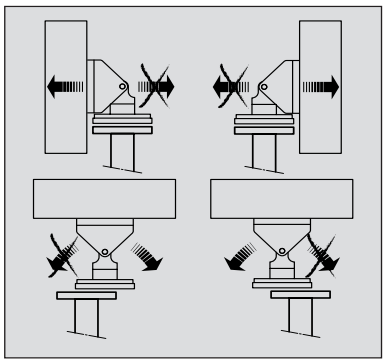

If the platform is used with the single side-shift carriage, it is ineffective and forbidden to orient the platform or move it laterally in the opposite direction.

The single side-shift carriage (TSDL) is only compatible with the following attachments:

- ***floating fork carriage (TFF)***
- ***tilting fork carriage (PFB)***
- ***loading bucket (CBR)***
- ***concrete bucket (BB, BBG)***
- ***chute bucket (GL)***
- ***crane jib and crane jib with winch (P, PT, PO, PC)***
- ***winch (H)***
- ***fixed platform, swivelling platform, roofer's platform.***

The use of any other attachment on the TSDL is forbidden.

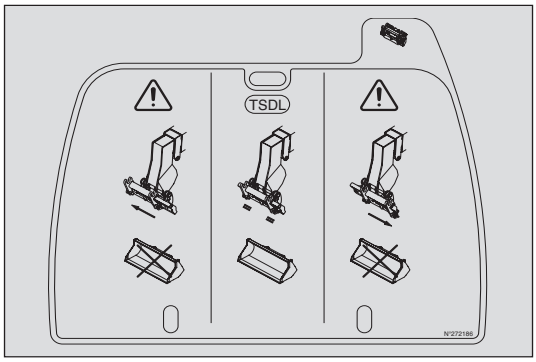

If it is being used with a loading bucket (CBR), the single side-shift carriage MUST be centred and no side-shift operations performed.

WITH JIB HEAD COUPLER

ATTACHMENT LINE CONTROL
- Set valve 1 to position A.
- Push button 2 forward or backward.

TSDL CONTROL
- Set valve 1 to position B.
- Push button 2 forward to move sideways to the right, and backward to move sideways to the left.

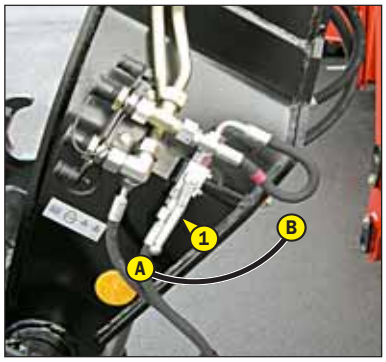

WITH JIB HEAD ELECTROVALVE

TSDL LINE L1 CONTROL
- Push button 2 forward to move sideways to the right, and backward to move sideways to the left.

ATTACHMENT LINE L2 CONTROL
- Hold down button 3 and push button 2 forwards or backwards.

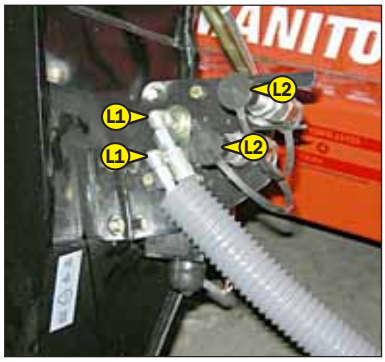

WITH JIB HEAD ELECTROVALVE + PREARRANGED HYDRAULIC ATTACHMENT LOCKING

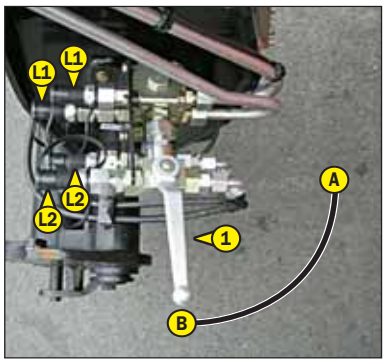

TSDL LINE L1 CONTROL
- Push button 2 forward to move sideways to the right, and backward to move sideways to the left.

ATTACHMENT LINE L2 CONTROL
- Set valve 1 to position A.
- Hold down button 3 and push button 2 forwards or backwards.

ATTACHMENT LOCKING CONTROL
- Set valve 1 to position B.
- Hold down button 3 and push button 2 forward to lock the attachment and backward to release it.

Once the attachment is locked, return valve 1 to position A to prevent accidental release of the attachment.

11 - SINGLE OR DUAL EFFECT REAR HYDRAULIC CONTROL PREDISPOSITION

Enables the use of a hydraulic attachment at the rear of the lift truck (e.g. a trailer with hydraulic tipping).

REAR HYDRAULIC CONTROL
- Press down on switch 1 (indicator lamp lit) to power the hydraulic control at the rear of the lift truck.
- Push button 2 forward or backward.

12 - LIFTING RING ON SINGLE CARRIAGE

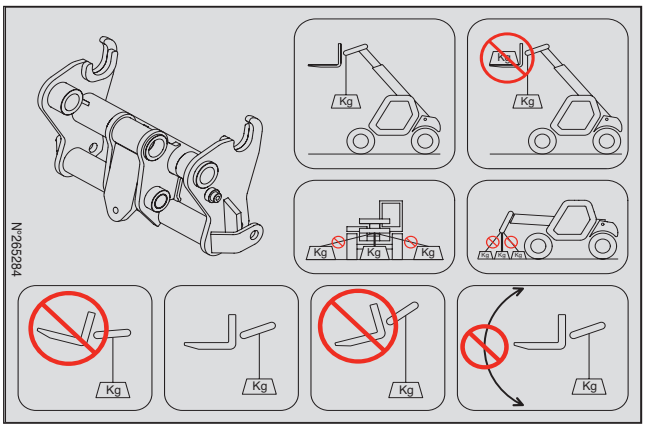

CONDITIONS OF USE

Follow the instructions given in your lift truck's instruction manual (see: 1 - OPERATING AND SAFETY INSTRUCTIONS ON HANDLING LOADS), in addition to those given below.

- The lifting ring must be used WITHOUT FORKS AND ATTACHMENTS, but the angle of inclination of the carriage must be same as when the forks are used in the horizontal position.
- Check the maximum authorized angle, which is 45°, on the screen.
- Do not change the angle of the carriage while using the lifting ring.
- The lifting hook, the chains and slings shall have a minimum capacity of 3000 kg with a factor of safety against breakage of 4.

LOAD CHARTS AND FUNCTION SHEETS

The load charts are given for use without forks and without attachments.

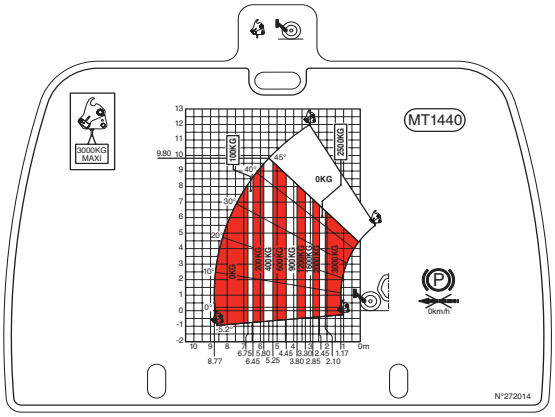

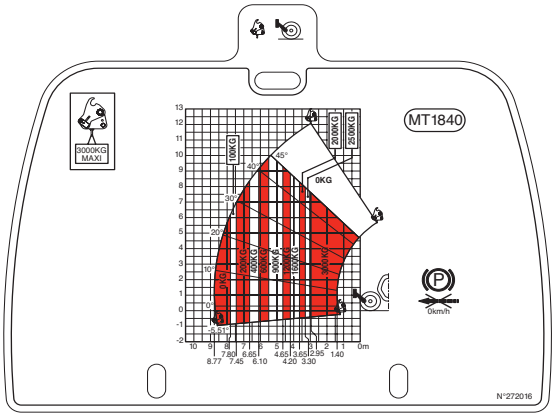

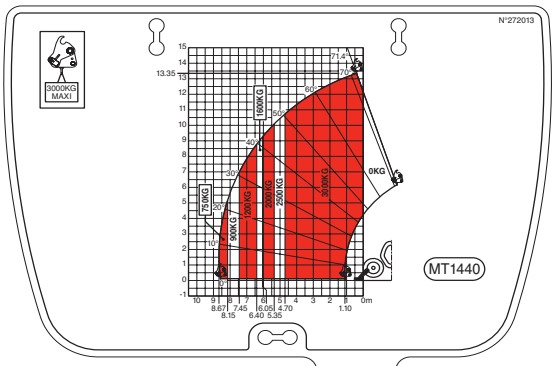

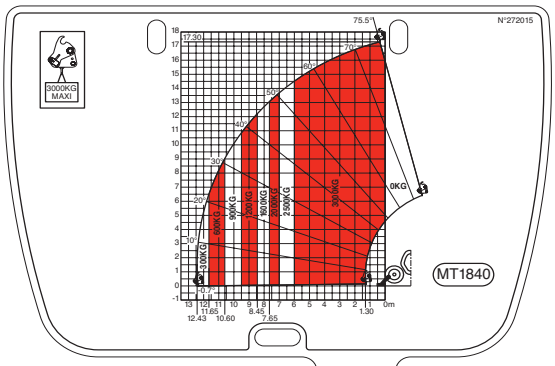

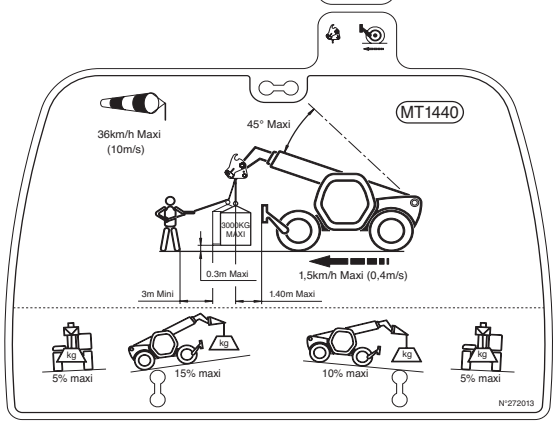

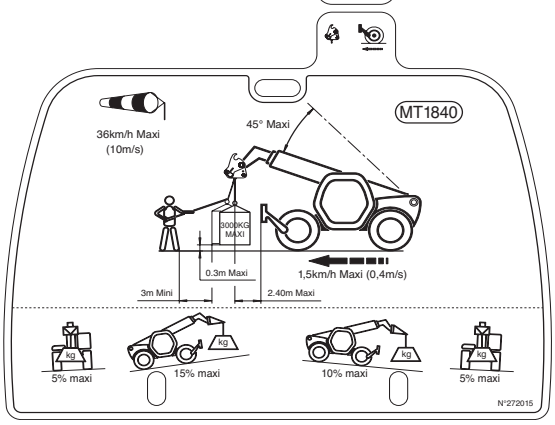

3 - MAINTENANCE

TABLE OF CONTENTS

MANITOU ORIGINAL SPARE PARTS AND EQUIPMENT 3-4

START-UP CHECKLIST 3-5

FILTERS CARTRIDGES AND BELTS 3-6

LUBRICANTS AND FUEL 3-8

SERVICING SCHEDULE 3-10

A - DAILY OR EVERY 10 HOURS SERVICE 3-12

B - EVERY 50 HOURS SERVICE 3-16

C - EVERY 250 HOURS SERVICE 3-20

D - EVERY 500 HOURS SERVICE 3-24

E - EVERY 1000 HOURS SERVICE 3-28

F - EVERY 2000 HOURS OF SERVICE 3-34

G - EVERY 4000 HOURS OF SERVICE 3-36

H - OCCASIONAL MAINTENANCE 3-38

I - FAULT-FINDING ON THE RADIO-CONTROL (OPTION) 3-44

MANITOU ORIGINAL SPARE PARTS AND EQUIPMENT

OUR LIFT TRUCKS MUST BE SERVICED USING ORIGINAL MANITOU PARTS.

IF YOU USE PARTS WHICH ARE NOT ORIGINAL MANITOU PARTS,

YOU RISK

- Legally - to be held responsible in the event of an accident.
- Technically - to generate operating failure or shorten the life of the lift truck.

THE USE OF COUNTERFEIT PARTS OR COMPONENTS NOT APPROVED BY THE MANUFACTURER, MEANS YOU LOSE THE BENEFIT OF THE CONTRACTUAL GUARANTEE.

BY USING ORIGINAL MANITOU PARTS FOR MAINTENANCE OPERATIONS,

YOU BENEFIT EXPERTISE

Through its network, MANITOU provides the user with

- Know-how and competence.
- The guarantee of high-quality work.
- Original replacement components.
- Help with preventive maintenance.
- Efficient help with diagnosis.
- Improvements due to experience feedback.
- Operator training.
- Only the MANITOU network has detailed knowledge of the design of the lift truck and therefore the best technical ability to provide maintenance.

ORIGINAL REPLACEMENT PARTS ARE DISTRIBUTED EXCLUSIVELY BY MANITOU AND ITS DEALER NETWORK.
the dealer network list is available on manitou web site www.manitou.com

START-UP CHECKLIST

0 = OK 1 = Missing 2 = Incorrect

100	**ENGINE**	
01	Air filter	
02	Fuel tank	
03	Fuel lines - Filter	
04	Injection or carburetion system	
05	Radiator and cooling system	
06	Belts	
07	Hoses	
101	**TRANSMISSION**	
01	Direction reversal system	
02	Gear shift	
03	Cut-off pedal	
04	Clutch	
102	**AXLES/TRANSFER GEAR BOX**	
01	operation and seal	
02	Stop settings	
103	**HYDRAULIC/HYDROSTATIC CIRCUIT**	
01	Tank	
02	Pumps and couplings	
03	Tightening of connections	
04	Lift cylinder(s)	
05	Tilt cylinder(s)	
06	Attachment cylinder(s)	
07	Telescope cylinder(s)	
08	Compensation cylinder(s)	
09	Steering cylinder(s)	
10	Control Valve	
11	Balancing valve	
104	**BRAKE SYSTEM**	
01	Service brake and parking brake operation	
02	Brake fluid level	
105	**LUBRICATION AND GREASING**	
106	**JIB/MANISCOPIC/MANIACCESS ASSEMBLY**	
01	Beam and telescope(s)	
02	Skid	
03	Hinges	
04	Carriage	
05	Forks	
107	**MAST ASSEMBLY**	
01	Fixed and mobile uprights	
02	Carriage	
03	Chains	
04	Rollers	
05	Forks	

108	**ATTACHMENTS**	
01	Fitting on machine	
02	Hydraulic couplings	
109	**CABIN/PROTECTOR/ELECTRIC CIRCUIT**	
01	Seat	
02	Dashboard and radio	
03	Sound and visual alarm/safety system	
04	Heating/Air conditioning	
05	Windscreen wiper/windscreen washer	
06	Road horn	
07	Reversing horn	
08	Road lights	
09	Additional lights	
10	Rotating beacon light	
11	Battery	
110	**WHEEL**	
01	Rims	
02	Tyre/Pressure	
111	**SCREWS**	
112	**FRAME AND BODYWORK**	
113	**PAINTING**	
114	**GENERAL OPERATION**	
115	**OPERATOR'S MANUAL**	
116	**CUSTOMER INSTRUCTIONS**	

FILTERS CARTRIDGES AND BELTS

I.C. ENGINE

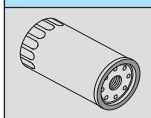	I.C. ENGINE OIL FILTER Part number: 476954 Change: 500 H	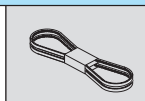	ALTERNATOR BELT Part number: 702974
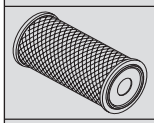	DRY AIR FILTER CARTRIDGE Part number: 563416 Clean: 50 H* Change: 500 H*	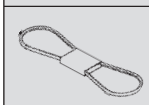	ALTERNATOR BELT (OPTION AIR CONDITIONING) Part number: 286931
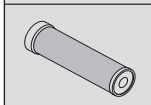	SAFETY DRY AIR FILTER CARTRIDGE Part number: 563415 Change: 1000 H*	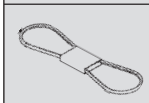	COMPRESSOR BELT (OPTION AIR CONDITIONING) Part number: 216125
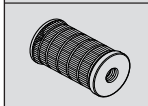	FUEL FILTER CARTRIDGE Part number: 605013 Change: 500 H	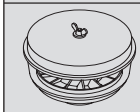	CYCLONIC PRE-FILTER Part number: 224713 Clean: 10 H
	FUEL PRE-FILTER CARTRIDGE Part number: 706497 Change: 500 H	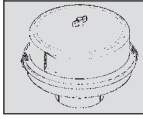	AUTOMATIC VACUUM-CLEANING PRE-FILTER (OPTION) Part number: 226611
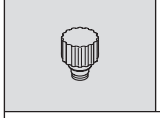	FUEL TANK BREATHER Part number: 266219 Change: 1000 H		

*: This periodicity is given for information only (see: 3 - MAINTENANCE: SERVICING SCHEDULE) for cleaning and changing.

TRANSMISSION

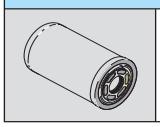	GEAR BOX OIL FILTER Part number: 745878 Change: 1000 H

HYDRAULIC

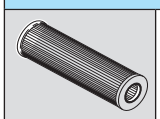	HYDRAULIC RETURN OIL FILTER CARTRIDGE Part number: 289920 Change: 500 H	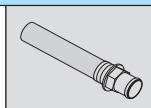	SUCTION STRAINER FOR HYDRAULIC OIL TANK Part number: 259500 Clean: 1000 H
	BREATHER FOR THE HYDRAULIC OIL TANK Part number: 261487 Change: 1000 H		BRAKE ACCUMULATOR UNIT FILTER Part number: 746308 Change: 1000 H
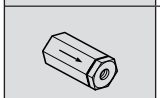	DISTRIBUTOR CONTROL HEAD FILTER Part number: 266242 Change: 1000 H	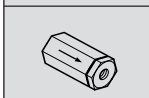	REAR AXLE OSCILLATION BLOCKING FILTER Part number: 266242 Change: 1000 H

CAB

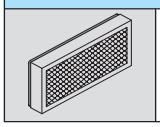	EXTERNAL CAB VENTILATION FILTER Part number: 261971 Clean: 50 H Change: 250 H	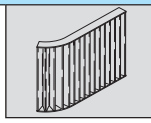	INTERNAL CAB VENTILATION FILTER Part number: 746106 Clean: 50 H Change: 250 H

LUBRICANTS AND FUEL

USE THE RECOMMENDED LUBRICANTS AND FUEL:
- For topping up, oils may not be miscible.
- For oil changes, MANITOU oils are perfectly appropriate.

DIAGNOSTIC ANALYSIS OF OILS
If a service or maintenance contract has been organized with the dealer, a diagnostic analysis of engine, transmission and axle oils may be requested depending on the rate of use.

(*) RECOMMENDED FUEL SPECIFICATION
Use a high-quality fuel to obtain optimal performance of the I.C. engine.

- N590 diesel fuel type - Auto/C0/C1/C2/C3/C4
- BS2869 Class A2
- ASTM D975-91 Class 2-2DA, US DF1, US DF2, US DFA
- JIS K2204 (1992) Grades 1, 2, 3 and Special Grade 3.

I.C. ENGINE

ORGANS TO BE LUBRICATED	CAPACITY	RECOMMENDATION	PACKAGING	PART NUMBER
I.C. ENGINE	10,9 Liters	MANITOU Oil API CH4	5 l 20 l 55 l 209 l 1000 l	661706 582357 582358 582359 490205
COOLING CIRCUIT	20 Liters	Cooling liquid (protection - 25°)	2 l 5 l 20 l 210 l	788245 788246 788247 788248
		Cooling liquid (protection - 35°)	20 l 210 l 1000 l	788249 788250 788251
FUEL TANK	140 Liters	Diesel fuel (*)		

TRANSMISSION

ORGANS TO BE LUBRICATED	CAPACITY	RECOMMENDATION	PACKAGING	PART NUMBER
GEAR BOX	23 Liters	MANITOU Oil Automatic transmission	1 l 20 l 55 l 209 l 1000 l	62148 546332 546217 546195 720148
TRANSMISSION UNIVERSAL JOINT		MANITOU Grease BLUE multi-purpose	400 g 1 kg 5 kg 20 kg 50 kg	161589 720683 554974 499233 489670

JIB

ORGANS TO BE LUBRICATED	RECOMMENDATION	PACKAGING	PART NUMBER
JIB PADS	MANITOU Grease BLACK multi-purpose	400 g 1 kg 5 kg	545996 161590 499235
GREASING OF THE JIB	MANITOU Grease BLUE multi-purpose	400 g 1 kg 5 kg 20 kg 50 kg	161589 720683 554974 499233 489670
MT 1840 A E3 JIB CHAINS	MANITOU Lubricant Chain special	400 ml	554271

HYDRAULIC

ORGANS TO BE LUBRICATED	CAPACITY	RECOMMENDATION	PACKAGING	PART NUMBER
HYDRAULIC OIL TANK	175 Liters	MANITOU Oil Hydraulic ISO VG 46	5 l 20 l 55 l 209 l	545500 582297 546108 546109

BRAKE			
ORGANS TO BE LUBRICATED	RECOMMENDATION	PACKAGING	PART NUMBER
BRAKE CIRCUIT	MANITOU Oil Mineral brake fluid	1 l	490408

CAB			
ORGANS TO BE LUBRICATED	RECOMMENDATION	PACKAGING	PART NUMBER
WINDSCREEN WASHER TANK	Windscreen washer fluid	1 l 5 l	490402 486424

FRONT AXLE				
ORGANS TO BE LUBRICATED	CAPACITY	RECOMMENDATION	PACKAGING	PART NUMBER
FRONT AXLE DIFFERENTIAL	7,6 Liters	MANITOU Oil Special immersed brakes	5 l 20 l 209 l 1000 l	545976 582391 546222 720149
FRONT WHEELS REDUCERS	0,8 Liter	MANITOU Oil SAE80W90 Mechanical transmission	2 l 5 l 20 l 55 l 209 l	499237 720184 546330 546221 546220
FRONT WHEELS REDUCERS PIVOTS FRONT AXLE OSCILLATION		MANITOU Grease BLACK multi-purpose	400 g 1 kg 5 kg	545996 161590 499235

REAR AXLE				
ORGANS TO BE LUBRICATED	CAPACITY	RECOMMENDATION	PACKAGING	PART NUMBER
REAR AXLE DIFFERENTIAL	7,6 Liters	MANITOU Oil Special immersed brakes	5 l 20 l 209 l 1000 l	545976 582391 546222 720149
REAR WHEELS REDUCERS	0,8 Liter	MANITOU Oil SAE80W90 Mechanical transmission	2 l 5 l 20 l 55 l 209 l	499237 720184 546330 546221 546220
REAR WHEELS REDUCERS PIVOTS REAR AXLE OSCILLATION		MANITOU Grease BLACK multi-purpose	400 g 1 kg 5 kg	545996 161590 499235

CHASSIS			
ORGANS TO BE LUBRICATED	RECOMMENDATION	PACKAGING	PART NUMBER
TILTING CORRECTOR STABILIZERS	MANITOU Grease BLUE multi-purpose	400 g 1 kg 5 kg 20 kg 50 kg	161589 720683 554974 499233 489670

ATTACHMENT			
ORGANS TO BE LUBRICATED	RECOMMENDATION	PACKAGING	PART NUMBER
PLATFORM SINGLE SIDE-SHIFT CARRIAGE (TSDL) (OPTION)	MANITOU Grease BLUE multi-purpose	400 g 1 kg 5 kg 20 kg 50 kg	161589 720683 554974 499233 489670

SERVICING SCHEDULE

(1): MANDATORY 500 HOUR OR 6 MONTH SERVICE

This service must be carried out after approximately the first 500 hours of operation or within the 6 months following the start-up of the machine (whichever occurs first).

A = ADJUST, C = CHECK, G = GREASE, N = CLEAN, P = BLEED, R = REPLACE, V = DRAIN

	PAGE	(1)	DAILY OR EVERY 10 HOURS SERVICE	EVERY 50 HOURS SERVICE	EVERY 250 HOURS SERVICE	EVERY 500 HOURS SERVICE OR 6 MONTHS	EVERY 1000 HOURS SERVICE OR 1 YEAR	EVERY 2000 HOURS SERVICE OR 2 YEARS	EVERY 4000 HOURS SERVICE	OCCASIONALLY
I.C. ENGINE										
I.C. engine oil level	3-12	C	C	<<<	<<<	<<<	<<<	<<<	<<<	
Cooling liquid level	3-12	C	C	<<<	<<<	<<<	<<<	<<<	<<<	
Fuel level	3-12	C	C	<<<	<<<	<<<	<<<	<<<	<<<	
Fuel pre-filter	3-12	C	C	<<<	<<<	<<<	<<<	<<<	<<<	
Cyclonic pre-filter	3-13	N	N	<<<	<<<	<<<	<<<	<<<	<<<	
Dry air filter cartridge	3-16/25	R		N	<<<	R	<<<	<<<	<<<	
Radiator core	3-16	N		N	<<<	<<<	<<<	<<<	<<<	
Condenser core (OPTION Air conditioning)	3-16	C/N		C/N	<<<	<<<	<<<	<<<	<<<	
Alternator belt tension	3-20	C/A			C/A	<<<	<<<	<<<	<<<	
Compressor belt tension (OPTION Air conditioning)	3-20	C/A			C/A	<<<	<<<	<<<	<<<	
Alternator belt tension (air conditioning OPTION)	3-22	C/A			C/A	<<<	<<<	<<<	<<<	
I.C. engine oil	3-24	V				V	<<<	<<<	<<<	
I.C. engine oil filter	3-24	R				R	<<<	<<<	<<<	
Fuel pre-filter cartridge	3-25	R				R	<<<	<<<	<<<	
Fuel filter cartridge	3-25	R				R	<<<	<<<	<<<	
Fuel tank	3-28						N	<<<	<<<	
Fuel tank breather	3-28						R	<<<	<<<	
Safety dry air filter cartridge	3-28						R	<<<	<<<	
I.C. engine silent blocks							C**	<<<	<<<	
I.C. engine rates							C**	<<<	<<<	
Valves clearances		C**					C**	<<<	<<<	
Cooling liquid	3-34							V	<<<	
Radiator								C**	<<<	
Water pump and the thermostat								C**	<<<	
Alternator and the starter motor								C**	<<<	
Turbocompressor								C**	<<<	
Fuel circuit	3-38									P
TRANSMISSION										
Gear box oil level	3-13	C	C	<<<	<<<	<<<	<<<	<<<	<<<	
Transmission universal joint	3-18	G		G	<<<	<<<	<<<	<<<	G/C**	
Gear box oil	3-29	V					V	<<<	<<<	
Gear box oil filter	3-29	R					R	<<<	<<<	
Silentblocks in the gear box							C**	<<<	<<<	
Gear box controls							C**	<<<	<<<	
Gear box pressures								C**	<<<	
Converter pressure								C**	<<<	
Wear of the brake pads and the brake disk									C**	
TYRES										
Tyres pressure	3-13	C	C	<<<	<<<	<<<	<<<	<<<	<<<	
Wheel nuts torque	3-13	C	C	<<<	<<<	<<<	<<<	<<<	<<<	
Condition of wheels and tyres							C**	<<<	<<<	
Wheel	3-38									R
JIB										
Jib pads	3-13		G*	<<<	<<<	<<<	<<<	<<<	<<<	
Jib	3-18	G		G	<<<	<<<	<<<	<<<	<<<	
Outer jib chains MT 1840 A E3	3-21	N/G/C			N/G/C	<<<	<<<	<<<	<<<	
Jib pads wear							C**	<<<	<<<	
Outer jib chain wear MT 1840 A E3	3-30						C	<<<	<<<	
Condition of jib unit								C**	<<<	
Bearings and articulation rings								C**	<<<	
Inner jib chain wear MT 1840 A E3	3-36								C	
HYDRAULIC										
Hydraulic oil level	3-17	C		C	<<<	<<<	<<<	<<<	<<<	
Hydraulic return oil filter cartridge	3-26	R				R	<<<	<<<	<<<	
Hydraulic oil	3-31						V	<<<	<<<	
Breather for the hydraulic oil tank	3-31						R	<<<	<<<	
Suction strainer for hydraulic oil tank	3-31						N	<<<	<<<	
Brake accumulator unit filter	3-31						R	<<<	<<<	
Distributor control head filter	3-31						R	<<<	<<<	
Rear axle oscillation blocking filter	3-31						R	<<<	<<<	
Speeds of hydraulic movements							C**	<<<	<<<	
Hydraulic pump tubular filter							N**	<<<	<<<	
Condition of hoses and flexibles pipes							C**	<<<	<<<	
Condition of cylinders (leakage, shafts)							C**	<<<	<<<	
Hydraulic circuit pressures								C**	<<<	
Hydraulic circuit outputs								C**	<<<	
Hydraulic oil tank								N**	<<<	

A = ADJUST, C = CHECK, G = GREASE, N = CLEAN, P = BLEED, R = REPLACE, V = DRAIN	PAGE	(1)	DAILY OR EVERY 10 HOURS SERVICE	EVERY 50 HOURS SERVICE	EVERY 250 HOURS SERVICE	EVERY 500 HOURS SERVICE OR 6 MONTHS	EVERY 1000 HOURS SERVICE OR 1 YEAR	EVERY 2000 HOURS SERVICE OR 2 YEARS	EVERY 4000 HOURS SERVICE	OCCASIONALLY
BRAKE										
Brake oil level	3-17	C		C	<<<	<<<	<<<	<<<	<<<	
Brake oil							V**	<<<	<<<	
Brake system							P**	<<<	<<<	
Brake system pressure							C**	<<<	<<<	
Brake							A**	<<<	<<<	
STEERING										
Steering								C**	<<<	
Steering swivel joints									C**	
CAB·										
Windscreen washer liquid level	3-17	C		C	<<<	<<<	<<<	<<<	<<<	
Cab ventilation filters	3-18/22	R		N	R	<<<	<<<	<<<	<<<	
Seat belt	3-32						C	<<<	<<<	
Condition of the rear view mirrors							C**	<<<	<<<	
Structure							C**	<<<	<<<	
Air conditioning (OPTION)	3-35							N/C	<<<	
ELECTRICITY										
Longitudinal stability limiter and warning device	3-14/39	C	C	<<<	<<<	<<<	<<<	<<<	<<<	XXX
Condition of wiring harness and cables							C**	<<<	<<<	
Lights and signals							C**	<<<	<<<	
Warning indicators							C**	<<<	<<<	
Front headlights	3-40									A
Battery failure	3-40									R
FRONT AXLE·										
Front wheels reducers pivots	3-18	G		G	<<<	<<<	<<<	<<<	G/C**	
Front axle oscillation	3-18	G		G	<<<	<<<	<<<	G/C**		
Front axle differential oil level	3-22	C			C	<<<	<<<	<<<	<<<	
Front wheels reducers oil level	3-22	C			C	<<<	<<<	<<<	<<<	
Front axle differential oil	3-27	V				V	<<<	<<<	<<<	
Front wheels reducers oil	3-32	V					V	<<<	<<<	
Wear of front axle brake discs									C**	
Front wheels reducers universal joint									C**	
Front wheels reducers clearance									C**	
REAR AXLE										
Rear wheels reducers pivots	3-18	G		G	<<<	<<<	<<<	<<<	G/C**	
Rear axle oscillation	3-18	G		G	<<<	<<<	<<<	G/C**		
Rear axle differential oil level	3-22	C			C	<<<	<<<	<<<	<<<	
Rear wheels reducers oil level	3-22	C			C	<<<	<<<	<<<	<<<	
Rear axle differential oil	3-27	V				V	<<<	<<<	<<<	
Rear wheels reducers oil	3-32	V					V	<<<	<<<	
Wearing of rear axle brake discs									C**	
Rear wheels reducers universal joint									C**	
Rear wheels reducers clearance									C**	
CHASSIS										
Tilting corrector	3-18	G		G	<<<	<<<	<<<	<<<	<<<	
Stabilizers	3-18	G		G	<<<	<<<	<<<	<<<	<<<	
Structure							C**	<<<	<<<	
Bearings and articulation rings								C**	<<<	
ATTACHMENTS										
Platform	3-18	G		G	<<<	<<<	<<<	<<<	<<<	
Single side-shift carriage (TSDL) (OPTION)	3-18	G		G	<<<	<<<	<<<	<<<	<<<	
Forks wear		C**				C**	<<<	<<<	<<<	
Attachment carriage							C**	<<<	<<<	
Condition of attachments							C**	<<<	<<<	
LIFT TRUCK										
Tow the lift truck	3-41									XXX
Sling the lift truck	3-41									XXX
Transport the lift truck on a platform	3-42									XXX

(*): Every 10 hours during the first 50 hours, then once at 250 hours.
(**): Consult your dealer.

A - DAILY OR EVERY 10 HOURS SERVICE

A1 - I.C. ENGINE OIL LEVEL

CHECK

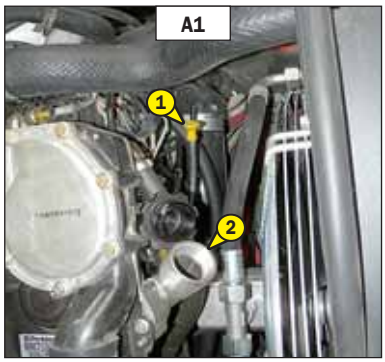

Place the lift truck on level ground with the I.C. engine stopped, and let the oil drain into the sump.

- Open the I.C. engine bonnet.
- Remove the dipstick 1 (fig. A1).
- Clean the dipstick and check the correct level between the two notches.
- If necessary, add oil (see: 3 - MAINTENANCE: LUBRICANTS AND FUEL) by the filler port 2 (fig. A1).
- Check visually that there is no leakage or seepage of oil in the I.C. engine.

A2 - COOLING LIQUID LEVEL

CHECK

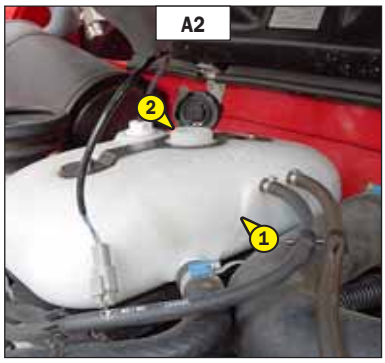

Place the lift truck on level ground with the I.C. engine stopped, and allow the I.C. engine to cool.

- Open the I.C. engine bonnet.
- The liquid must be at the MAXIMUM level on the expansion pan 1 (fig. A2).
- If necessary, add cooling liquid (see: 3 - MAINTENANCE: LUBRICANTS AND FUEL) through the filler port 2 (fig. A2).
- Check visually that there is no leakage in the radiator and pipes.

To avoid any risk of spraying or burning, wait until the I.C. engine has cooled down before removing the cooling circuit filler plug. If the cooling liquid is very hot, add only hot cooling liquid (80°C). In an emergency, you can use water as a cooling liquid, then change the cooling circuit liquid as soon as possible (see: 3 - MAINTENANCE: F1 - COOLING LIQUID).

A3 - FUEL LEVEL

CHECK

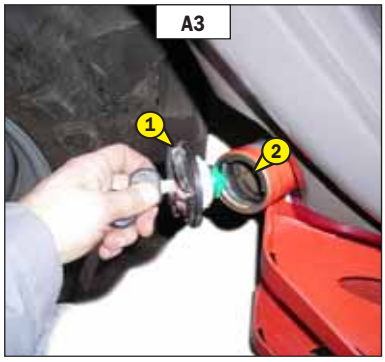

Keep the fuel tank full, to reduce as much as possible any condensation due to the atmospheric conditions.

- Check the dipstick level on the instrument panel.
- If necessary, add cooling liquid (see: 3 - MAINTENANCE: LUBRICANTS AND FUEL).
- Remove cap 1 (fig. A3) using the switch key.
- Fill the fuel tank with clean diesel and filtered through filler port 2 (fig. A3).
- Put the cap back.
- Check visually that there is no leakage in the tank and pipes.

Never smoke or approach with a flame during filling operations or when the tank is open. Never refill while I.C. engine is running.

A4 - FUEL PRE-FILTER

CHECK

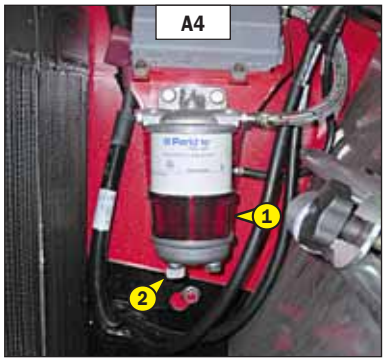

- Open the I.C. engine bonnet.
- Check for the presence of water in the pre-filter bowl 1 (fig. A4) and empty it out if necessary.
- Place a receptacle under the drain plug 2 (fig. A4) and loosen it in two to three thread turns.
- Allow the diesel fuel to flow out until it is free from impurities and water.
- Tighten the drain plug while the diesel fuel is running out.

A5 - CYCLONIC PRE-FILTER

CLEAN

The cleaning interval is given as a guide, however the prefilter must be emptied as soon as impurities reach the MAXI level on the tank.

- Loosen nut 1 (fig. A5), remove cover 2 (fig. A5) and empty the tank.
- Clean the prefilter unit with a clean dry cloth and reassemble the unit.

When cleaning, take care not to let impurities into the dry air filter.

A6 - GEAR BOX OIL LEVEL

CHECK

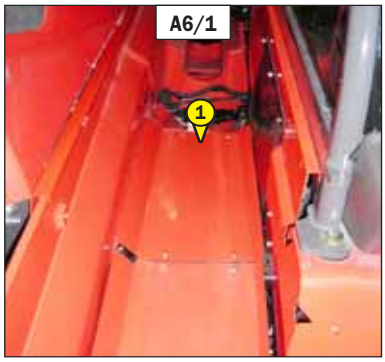

Park the lift truck on level ground with the jib raised, the I.C. engine cold and stopped. Carry out the control within 5 minutes of the I.C. engine being stopped.

- Raise the jib and remove protective guard back 1 (fig. A6/1).
- Remove dipstick 2 (fig. A6/2) by unscrewing it.
- Wipe the dipstick and check the correct level against the MAX mark.
- If necessary, add oil (see: 3 - MAINTENANCE: E4 - GEAR BOX OIL) through filler port 3 (fig. A6/2).
- Screw the dipstick back in whilst pressing it down so as to ensure its hold and its airtightness.
- Check visually that there is no leakage or seepage of oil in the transmission.

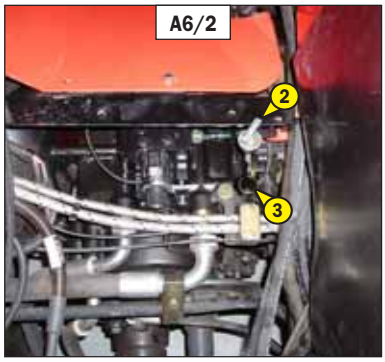

A7 - TYRES PRESSURE AND WHEEL NUTS TORQUE

CHECK

- Check the condition of the tyres, to detect cuts, protuberances, wear, etc.
- Check the torque load of the wheel nuts. Non compliance with this instruction can cause damage and rupture to the wheel bolts and distortion to the wheels.
  Wheel nuts tightening torque
  - Front tyres: 630 N.m ± 15%
  - Rear tyres: 630 N.m ± 15%
- Check and adjust the tyre pressures if necessary (see: 2 - DESCRIPTION: FRONT AND REAR TYRES).

Check that the air hose is correctly connected to the tyre valve before inflating and keep all persons at a distance during inflation. Respect the recommended tyre pressures given.

NOTE: There is an OPTIONAL wheel toolkit.

A8 - JIB PADS

CLEAN - GREASE

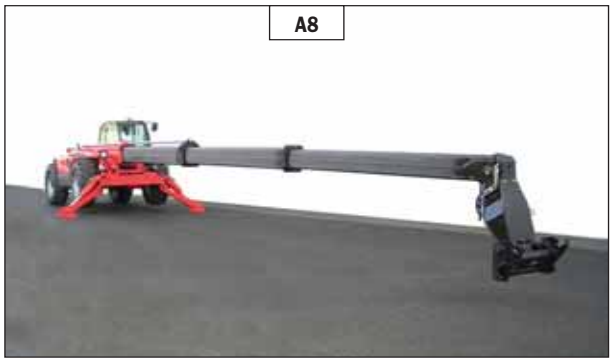

To be carried out every 10 hours during the first 50 hours service, then once at 250 hours.

- Extend the jib completely.
- With a brush, apply a coat of grease (see: 3 - MAINTENANCE: LUBRICANTS AND FUEL) on the 4 sides of the telescope(s) (fig. A8).
- Telescope the jib several times in order to spread the coat of grease evenly.
- Remove the surplus of grease.

If the lift truck is used in an abrasive environment (dust, sand, coal...) Use lubricating varnish (MANITOU reference: 483536). In this respect, consult your dealer.

A9 - LONGITUDINAL STABILITY LIMITER AND WARNING DEVICE

CHECK

- These tests are essential for checking the correct operation and adjustment of the different components of the device.
- Place the lift truck on flat, level ground with the wheels straight.

In case of doubt during the test procedure, exit by pressing the cancel button briefly .

Long press on the test button.

STAGE 1

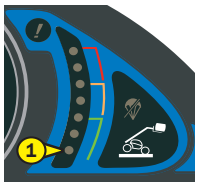

- First green led flashing.
- Test button lit.
- Screen display.

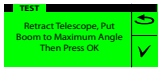

- An audible beep.

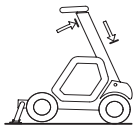

- Place the lift truck with no attachments, with the left and right-hand stabilizers on the ground, the front wheels off the ground and the jib fully retracted and raised.

Short press on the test button .

- Go to stage 2.

STAGE 2

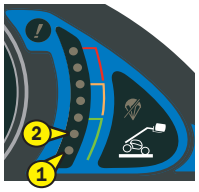

- First green led continuously lit.
- Second green led flashing.
- Test button lit.
- Screen display.

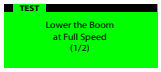

- Lower the jib with the engine running at full revs and the hydraulic control at the maximum setting. Lowering slows until movement is cut-off.

Short press on the test button .

- Go to stage 3.

STAGE 3

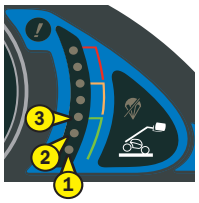

- First and second green LEDs continuously lit.
- Third green led flashing.
- Test button lit.
- Screen display.

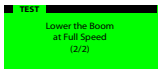

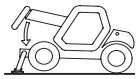

- Continue to lower the jib with the engine running at full revs and the hydraulic control at the maximum setting. Lowering slows until movement is next cut-off.

Short press on the test button .

TEST OK

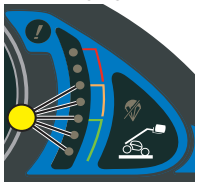

- First 5 LEDs lit.
- Screen display.

- Press the button To exit test mode.

TEST NOT OK

- See stage 4.

STAGE 4

- The fault warning light remains flashing on until the error is repaired.
- Screen display.

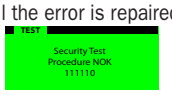

- The combination is the result of tests carried out in the following order:

1st digit	2nd digit	3rd digit	4th digit	5th digit	6th digit
Telescope retracted sensor fault.	Right or left stabilizer sensor fault.	Jib angle sensor fault.	Strain gauge fault.	Safety valve fault.	Governing fault.

1 = Test OK
0 = Fault detected

- Consult your dealer and provide the combination.
- Press the button to exit test mode.

B - EVERY 50 HOURS SERVICE

Carry out the operations described previously as well as the following operations.

B1 - DRY AIR FILTER CARTRIDGE

CLEAN

In case of use in a heavily dust laden atmosphere, there are pre-filtration cartridges (see: 3 - MAINTENANCE: FILTERS CARTRIDGES AND BELTS). Also, the checking and cleaning periodicity of the cartridge must be reduced.

If the clogging indicator light comes on, this operation must be carried out as quickly as possible (1 hour maximum). The cartridge must not be cleaned more than seven times, after which the cartridge must be changed.

- For the disassembly and reassembly of the cartridge, see: 3 - MAINTENANCE: D3 - DRY AIR FILTER CARTRIDGE.
- Clean the filter cartridge using a compressed air jet (max. pressure 3 bar) directed from the top to the bottom and from the inside towards the outside at a minimum distance of 30 mm from the cartridge wall.
- Cleaning is completed when there is no more dust on the cartridge.

Respect the safety distance of 30 mm between the air jet and the cartridge to avoid tearing or making a hole in the cartridge. The cartridge must not be blown anywhere near the air filter box. Never clean the cartridge by tapping it against a hard surface. Your eyes must be protected during this intervention.

- Clean the cartridge seal surfaces with a damp, clean lint-free cloth and grease with a silicone lubricant (MANITOU reference: 479292).
- Check visually the outer condition of the air filter and its mounts. Verify the condition of the hoses and their mounts also.

Do not clean the dry air filter cartridge by washing it in liquid. Do not clean by any means the safety cartridge located inside the filter cartridge, change it for a new one if it is dirty or damaged.

B2 - RADIATOR CORE

CLEAN

In a polluting atmosphere, clean the radiator core every day. Do not use a water jet or high-pressure steam as this could damage the radiator fins.

- Open the I.C. engine bonnet.
- If necessary, clean the suction grid on the engine bonnet.
- Using a soft cloth, clean the radiator in order to remove as much dirt as possible.
- Clean the radiator using a compressed air jet aimed in the same direction as the cooling air flow (fig. B2).
- So as to enhance the cleaning, carry out this operation with the fan running.

B3 - CONDENSER CORE (OPTION AIR CONDITIONING)

CHECK - CLEAN

In a polluting atmosphere, clean the radiator core every day. Do not use a water jet or high-pressure steam as this could damage the condenser fins.

- Visually check whether the condenser (fig. B3) is clean and clean it if necessary.
- Clean the condenser using a compressed air jet aimed in the same direction as the air flow.
- So as to enhance the cleaning, carry out this operation with the fans running.

B4 - HYDRAULIC OIL LEVEL

CHECK

Place the lift truck on level ground with the I.C. engine stopped, and the jib retracted and lowered as far as possible.

- Check dipstick 1 (fig. B4/1). The correct level must stand at the level of the red point.
- If necessary, add oil (see: 3 - MAINTENANCE: LUBRICANTS AND FUEL).
- Lift up protective casing 2 (fig. B4/1).
- Remove cap 3 (fig. B4/2).
- Add oil by filler port 4 (fig. B4/2).

Use a clean funnel and clean the underside of the oil drum before filling.

- Put the cap back.
- Check visually that there is no leakage in the tank and pipes.
- Refit the protective casing.

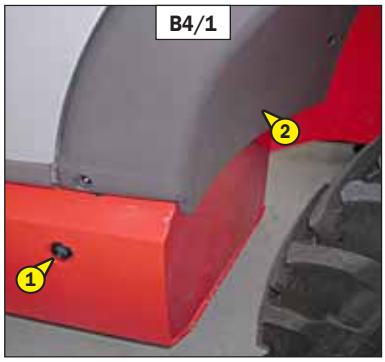

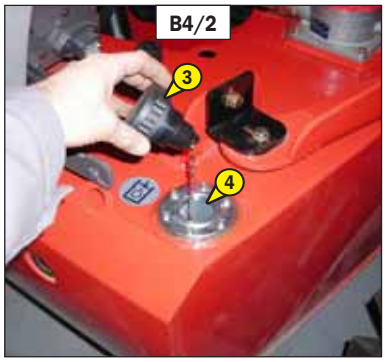

B5 - BRAKE OIL LEVEL

CHECK

Place the lift truck on level ground.

- Remove protective casing 1 (fig. B5/1) using the switch key.
- Check tank 2 (fig. B5/2). The correct level must stand at the MAX. level in the tank.
- If necessary, add oil (see: 3 - MAINTENANCE: LUBRICANTS AND FUEL).
- Remove cap 3 (fig. B5/2).
- Add oil by filler port 4 (fig. B5/2).
- Put the cap back.
- Check visually that there is no leakage in the tank and pipes.

If the braking oil level is abnormally low, consult your dealer.

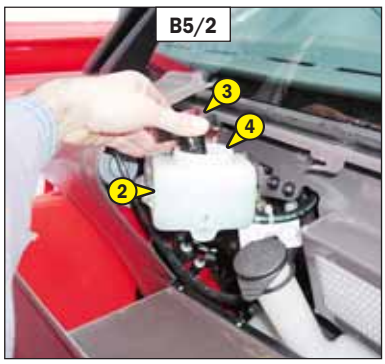

B6 - WINDSCREEN WASHER LIQUID LEVEL

CHECK

- Visually check the level in tank 1 (fig. B6).
- If necessary add windscreen washer liquid (see: 3 - MAINTENANCE: LUBRICANTS AND FUEL).
- Remove cap 2 (fig. B6).
- Add windscreen washer liquid through filler port 3 (fig. B6).
- Put the cap back.

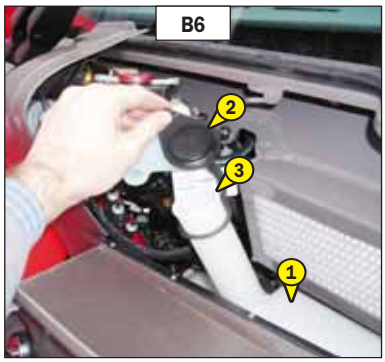

B7 - CAB VENTILATION FILTER

CLEAN

EXTERNAL CAB VENTILATION FILTER
- Lift out cabin ventilation filter 1 (fig. B7/1).
- Clean the filter with a compressed air jet.
- Check its condition and change if necessary (see: 3 - MAINTENANCE: FILTERS CARTRIDGES AND BELTS).
- Put the filter back into place.
- Put the protective guard back 2 (fig. B7/2).

INTERNAL CAB VENTILATION FILTER
- Lift out protective grid 3 (fig. B7/3).
- Lift out cabin ventilation filter 4 (fig. B7/4).
- Clean the filter with a compressed air jet.
- Check its condition and change if necessary (see: 3 - MAINTENANCE: FILTERS CARTRIDGES AND BELTS).
- Put the filter back into place.
- Put the protective grid back into place.

B8 - GENERAL GREASING

GREASE

To be carried out weekly, if the lift truck has been operated for less than 50 hours during the week.

In the event of prolonged use in an extremely dusty or oxidising atmosphere, reduce this interval to 10 working hours or every day.

Clean and lubricate the following points with grease (see: 3 - MAINTENANCE: LUBRICANTS AND FUEL) and remove the surplus of grease.

TRANSMISSION UNIVERSAL JOINT
1 - Lubricators of the universal joint Transmission/Front axle (3 lubricators).
2 - Lubricators of the universal joint Transmission/Rear axle (3 lubricators).

JIB
3 - Lubricators of the jib axle (2 lubricators).
4 - Lubricators of the carriage axle (2 lubricators).
5 - Lubricator of the tilt cylinder foot axle (1 lubricator).
6 - Lubricator of the tilt cylinder head axle (1 lubricator).
7 - Lubricator of the lifting cylinder foot axle (1 lubricator).
8 - Lubricator of the lifting cylinder head axle (1 lubricator).
9 - Lubricator of the compensation cylinder foot axle (1 lubricator).
10 - Lubricator of the compensation cylinder head axle (1 lubricator).
MT 1840 A E3
11 - Lubricator of the chain pulley axle of telescope 2 at the top of the jib (1 lubricator).
12 - Lubricator of the chain pulley axle of telescope 1 at the top of the jib (1 lubricator).
13 - Lubricator of the chain pulley axle of telescope 1 at the bottom of the jib (1 lubricator).
14 - Lubricator of the hose pulley axle at the bottom of the jib (1 lubricator).

FRONT AND REAR WHEELS REDUCER PIVOTS
15 - Lubricators of the wheel reduction gear pivots (8 lubricators).

AXLE OSCILLATION
16 - Front axle oscillation lubricators (2 lubricators).
17 - Rear axle oscillation lubricators (2 lubricators).

ROLL CORRECTOR
18 - Lubricator of the roll corrector cylinder foot axle (1 lubricator).
19 - Lubricator of the roll corrector cylinder head axle (1 lubricator).

STABILISERS
20 - Lubricators of the stabiliser cylinders' foot axle (2 lubricators).
21 - Lubricators of the stabiliser cylinders' head axle (2 lubricators).
22 - Lubricators of the stabiliser axles (2 lubricators).

PLATFORM
23 - Lubricators of the platform rotation axles (2 lubricators).
24 - Lubricators of the platform rotation cylinders' body axles (4 lubricators).
25 - Lubricators of the platform rotation cylinders' head axles (2 lubricators).

SINGLE SIDE-SHIFT CARRIAGE (TSDL) (OPTION)
26 - Wear plate lubricators (8 lubricators).

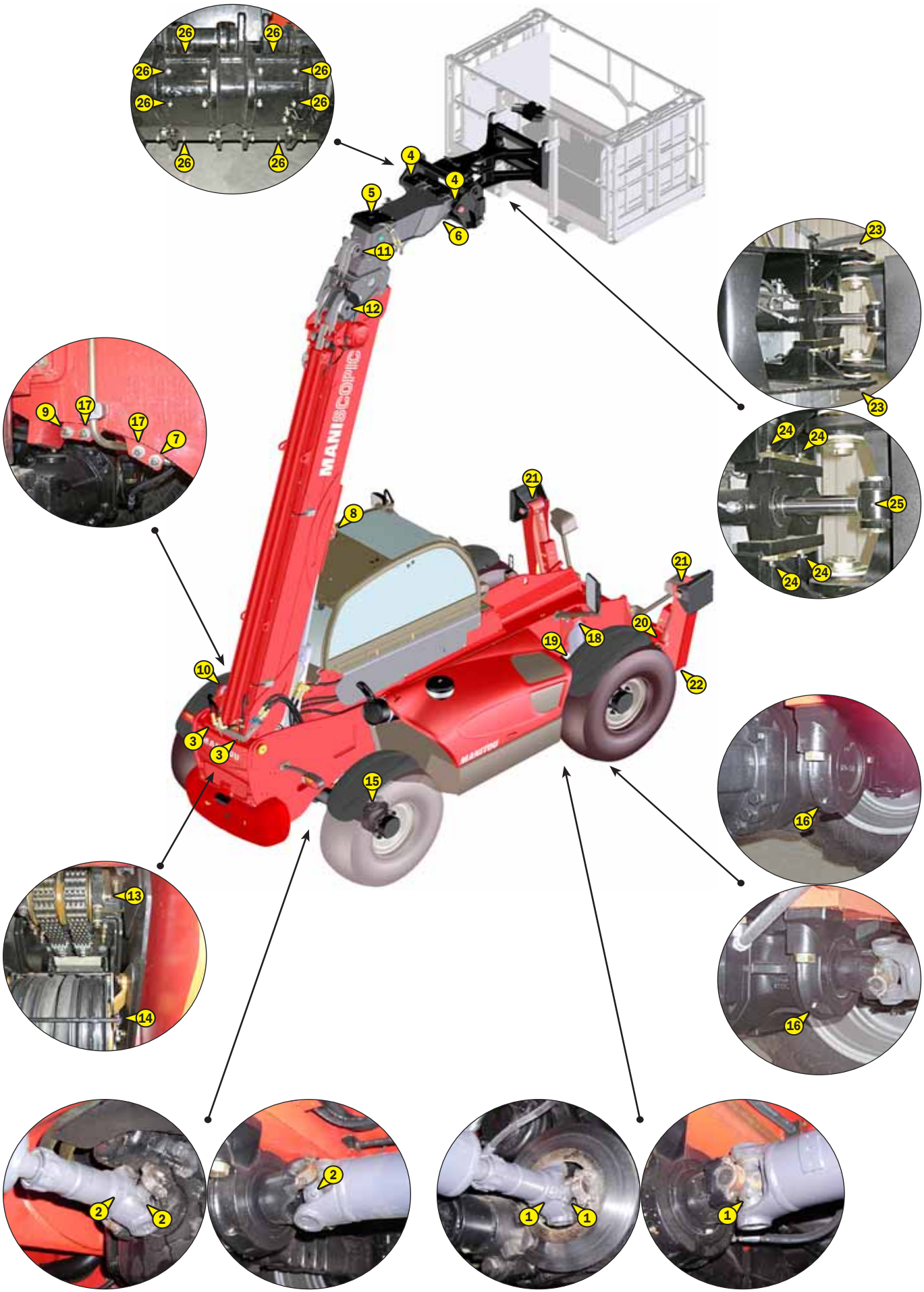
26
4
5
6
11
12
23
9
17
7
24
25
21
8
20
19
18
22
10
3
15
16
13
14
2
1

C - EVERY 250 HOURS SERVICE

Carry out the operations described previously as well as the following operations.

C1 - ALTERNATOR BELT TENSION

CHECK - ADJUST

- Open the I.C. engine bonnet.
- Unscrew the fastening screws 1 (fig. C1/1).
- Lay down the protective guard 2 (fig. C1/1).
- Check the belt for signs of wear and cracks and change if necessary (see: 3 - MAINTENANCE: FILTERS CARTRIDGES AND BELTS).
- Check the belt tension between the pulleys of the crankshaft and of the alternator.
- Under a normal pressure exerted with the thumb (45 N), the belt should move approximately 10 mm.
- Carry out adjustments if necessary.
- Untighten screws 3 (fig. C1/2) with two to three thread turns.
- Swivel the alternator assembly so as to obtain the belt tension required.
- Retighten screws 3 (fig. C1/2) (tightening torque 22 N.m).
- Refit the protective casing.

If the alternator belt has to be changed, check the tension again after the first 20 hours of operation.

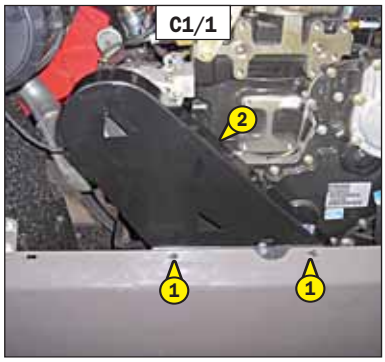

C1/1

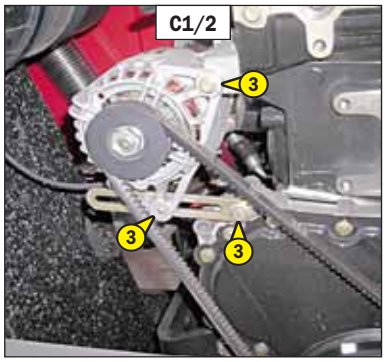

C1/2

C2 - COMPRESSOR BELT TENSION (OPTION AIR CONDITIONING)

CHECK - ADJUST

C3 - ALTERNATOR BELT TENSION (AIR CONDITIONING OPTION)

CHECK - ADJUST

- Open the I.C. engine bonnet.
- Unscrew the fastening screws 1 (fig. C2/1).
- Lay down the protective guard 2 (fig. C2/1).

After adjusting the compressor belt, you must carry out the adjustment of the alternator belt.

COMPRESSOR BELT
- Check the belt for signs of wear and cracks and change if necessary (see: 3 - MAINTENANCE: FILTERS CARTRIDGES AND BELTS).
- Check the belt tension between the pulleys of the crankshaft and of the compressor.
- Under a normal pressure exerted with the thumb (45 N), the belt should move approximately 10 mm.
- Carry out adjustments if necessary.
- Untighten screws 3 (fig. C2/2) by two to three thread turns.
- Swivel the compressor assembly so as to obtain the belt tension required.
- Retighten screws 3 (fig. C2/2) (tightening torque 22 N.m).

ALTERNATOR BELT
- Check the belt for signs of wear and cracks and change if necessary (see: 3 - MAINTENANCE: FILTERS CARTRIDGES AND BELTS).
- Check the belt tension between the pulleys of the alternator and the compressor
- Under a normal pressure exerted with the thumb (45 N), the belt should move approximately 10 mm.
- Carry out adjustments if necessary.
- Untighten screws 4 (fig. C2/3) by two to three thread turns.
- Swivel the alternator assembly so as to obtain the belt tension required.
- Retighten screws 4 (fig. C2/3) (tightening torque 22 N.m).
- Refit the protective casing.

If the compressor belt has to be changed, check the tension again after the first 20 hours of operation.

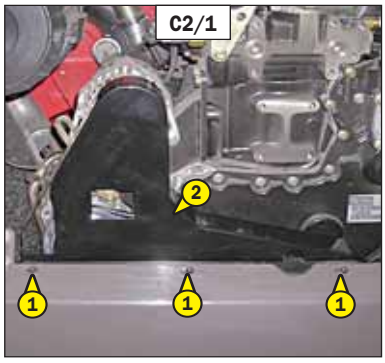

C2/1

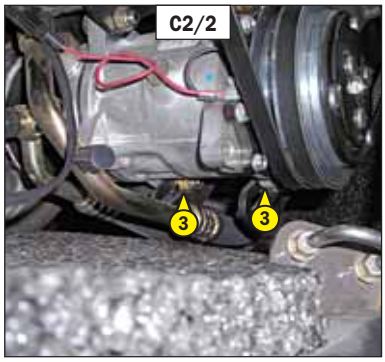

C2/2

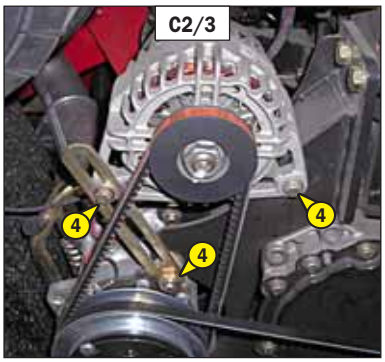

C2/3

C4 - OUTER JIB CHAINS

CLEAN - GREASE - CHECK

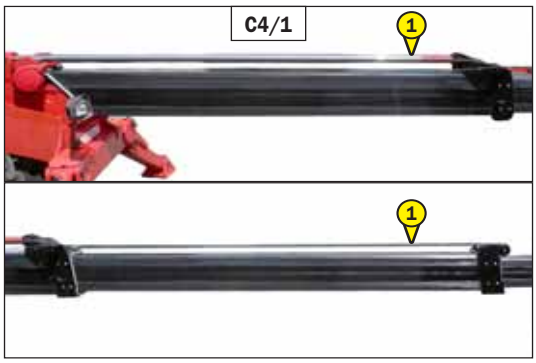

MT 1840 A E3

CLEAN AND GREASE

- Set the lift truck on its stabilizers, with the jib horizontal.
- Fully extend the telescopes.
- Protect the underside of the telescopes.
- Wipe the chains on the outside of the jib 1 (fig. C4/1) with a clean, lint-free cloth, then examine them closely so as to detect any signs of wear.
- Vigorously brush the chains to get rid of any foreign matter, with a hard nylon brush and clean diesel fuel.
- Rinse the chains by means of a paint brush impregnated with clean diesel fuel and dry them with a compressed air jet.
- Lightly lubricate the chains (see: 3 - MAINTENANCE: LUBRICANTS AND FUEL), and perform a number of telescoping movements to check the behaviour of the chains.

In case of technical faults, consult your dealer.

CHECK THE TENSION

- Fully extend the telescopes, then retract the jib 200 mm.
- At the centre of both telescopes (T1) and (T2) (fig. C4/2), use a ruler to measure the perpendicular distance between the top of the telescope and the underside of the chain (fig. C4/2), this distance must be identical for both chains.

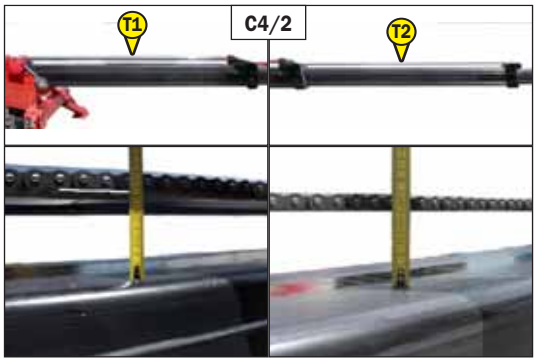

- Telescope (T1): between 117 mm and 97 mm

- If necessary, adjust with the tensioners 2 (fig. C4/3).
- Loosen the locknuts 3 (fig. C4/3), tighten nut 4 (fig. C4/3) until the required distance is obtained.
- Retighten the locknuts 3 (fig. C4/3) while restraining the nut 4 (fig. C4/3).

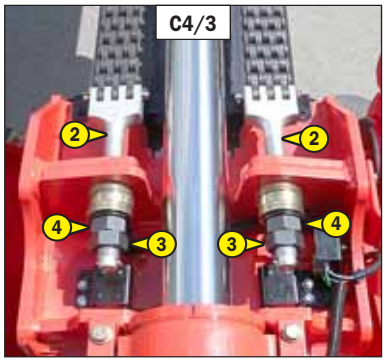

- Telescope (T2): between 85 mm and 65 mm

- If necessary, adjust with the tensioners 5 (fig. C4/4).
- Loosen the locknuts 6 (fig. C4/4), tighten nut 7 (fig. C4/4) until the required distance is obtained.
- Retighten the locknuts 6 (fig. C4/4) while restraining the nut 7 (fig. C4/4).

These checks are important for the proper operation of the jib. In case of technical faults, consult your dealer.

If the chains are too long to allow tension to be adjusted, replace them in pairs. If one of the chains is broken, replace the chains in pairs also.

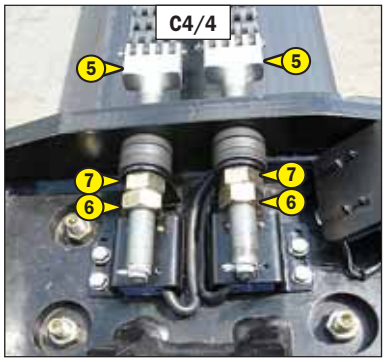

C5 - CAB VENTILATION FILTERS

CHANGE

EXTERNAL CAB VENTILATION FILTER
- Remove protective casing 1 (fig. C5/1) using the switch key.
- Lift out cab ventilation filter 2 (fig. C5/2) and replace it with a new one (see: 3 - MAINTENANCE: FILTERS AND BELTS).
- Refit the protective casing.

INTERNAL CAB VENTILATION FILTER
- Lift up protective casing 3 (fig. C5/3).
- Lift out cab ventilation filter 4 (fig. C5/4) and replace it with a new one (see: 3 - MAINTENANCE: FILTERS AND BELTS).
- Put the protective grid back into place.

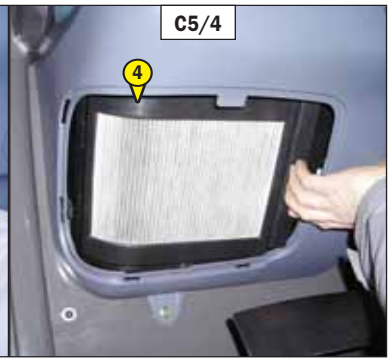

C6 - FRONT AND REAR AXLE DIFFERENTIAL OIL LEVEL

CHECK

Place the lift truck on level ground with the I.C. engine stopped.

- Remove level plug 1 (fig. C6). The oil should be flush with the edge of the hole.
- If necessary, add oil (see: 3 - MAINTENANCE: LUBRICANTS AND FUEL) by the filler port 2 (fig. C6).
- Replace and tighten the level plug 1 (fig. C6) (tightening torque 34 to 49 N.m).

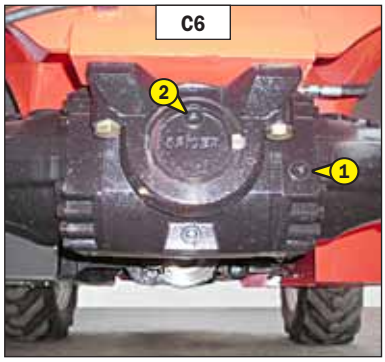

C7 - FRONT AND REAR WHEELS REDUCERS OIL LEVEL

CHECK

Place the lift truck on level ground with the I.C. engine stopped.

- Check the level on each wheel reducer.
- Place level plug 1 (fig. C7) in the horizontal position.
- Remove the level plug ; the oil should be flush with the edge of the hole.
- If necessary, add oil (see: 3 - MAINTENANCE: LUBRICANTS AND FUEL) by the same hole.
- Refit and tighten the level plug (tightening torque 34 to 49 N.m).

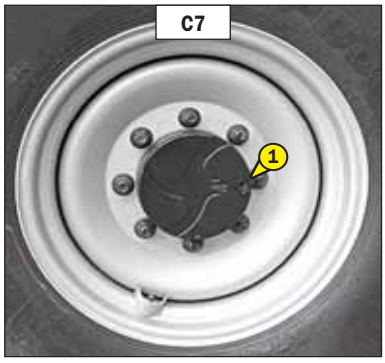

D - EVERY 500 HOURS SERVICE

Carry out the operations described previously as well as the following operations.

D1 - I.C. ENGINE OIL

DRAIN

D2 - I.C. ENGINE OIL FILTER

CHANGE

Place the lift truck on level ground, let the I.C. engine run at idle for a few minutes, then stop the I.C. engine.

DRAINING THE OIL
- Open the I.C. engine bonnet.
- Remove access panel 1 (fig. D1/1).
- Place a container under the drain plug and unscrew the drain plug 2 (fig. D1/2).
- Take drain hose 3 (fig. D1/3).
- Place the end of the drain hose in the tank and screw the hose fully to the drain connector 2 (fig. D1/2).
- Remove filler cap 4 (fig. D1/4) in order to ensure that the oil is drained properly.

Dispose of the drain oil in an ecological manner.

REPLACEMENT OF THE FILTER
- Unscrew and discard the engine oil filter 5 (fig. D1/2) as well as its seal.
- Clean the filter bracket with a clean, lint-free cloth.
- Lightly grease the new seal before refitting the new oil filter (see: 3 - MAINTENANCE: FILTERS AND BELTS) on its bracket.

Tighten the oil filter by hand pressure only and lock the filter in place by a quarter turn.

FILLING UP THE OIL
- Remove, clean and refit drain hose 3 (fig. D1/3).
- Refit and tighten drain plug 2 (fig. D1/2).
- Fill up with oil (see: 3 - MAINTENANCE: LUBRICANTS AND FUEL) through filler port 6 (fig. D1/4).
- Wait a few minutes to allow the oil to flow into the sump.
- Start the I.C. engine and let it run for a few minutes.
- Check for possible leaks from the drain plug and the oil filter.
- Stop the engine, wait a few minutes and check the correct level on the dipstick 7 (fig. D1/4) between the two level marks.
- Top up the level if necessary.
- Refit access panel 1 (fig. D1/1).

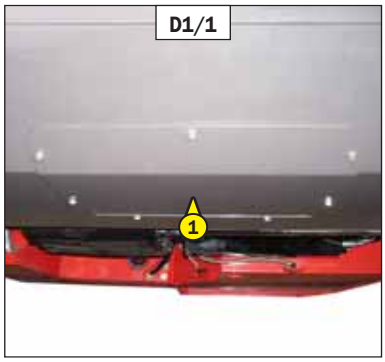

D1/1

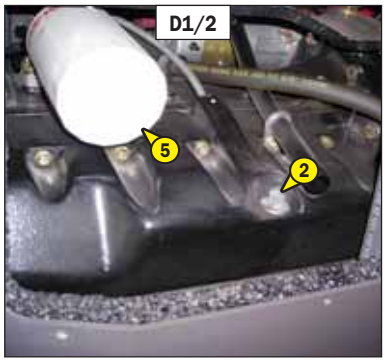

D1/2

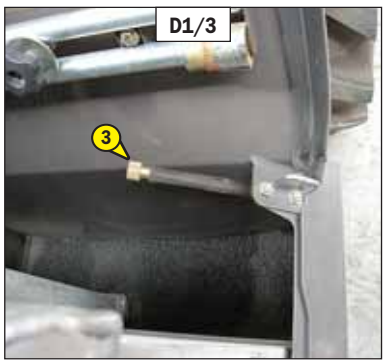

D1/3

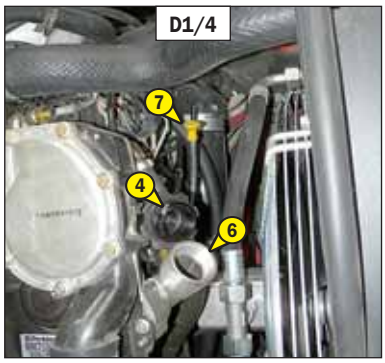

D1/4

D3 - DRY AIR FILTER CARTRIDGE

CHANGE

In case of use in a heavily dust laden atmosphere, there are pre-filtration cartridges, see: 3 - MAINTENANCE: FILTERS CARTRIDGES AND BELTS. Also, the checking and cleaning periodicity of the cartridge must be reduced (up to 250 hours in a heavily laden dust atmosphere and with pre-filtration).

Change the cartridge in a clean location, with the I.C. engine stopped. Never operate the lift truck with the air filter removed or damaged.

- Open the I.C. engine bonnet.
- Loosen the bolts and remove cover 1 (fig. D3).
- Gently remove the cartridge 2 (fig. D3), taking care to avoid spilling the dust.
- Leave the safety cartridge in place.
- The following parts must be cleaned with a damp, clean lint-free cloth.
    - The inside of the filter and cover.
    - The inside of the filter inlet hose.
    - The gasket surfaces in the filter and in the cover.
- Check pipes and connections between the air filter and the I.C. engine and the connection and state of the clogging indicator on the filter.
- Before mounting, check the state of the new filter cartridge (see: 3 - MAINTENANCE: FILTERS AND BELTS).
- Introduce the cartridge into the filter axis and push it in, pressing the edges and not the middle.
- Reassemble the cover, guiding the valve downwards.

D4 - FUEL PRE-FILTER CARTRIDGE

CHANGE

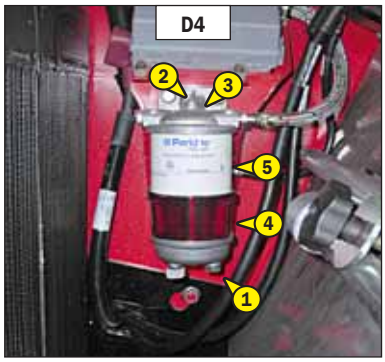

Make sure the electrical contact on the lift truck is cut, otherwise fuel will be released if the lift pump is on.

- Open the I.C. engine bonnet.
- Carefully clean the outside of the filter and its holder, to prevent dust from getting into the system.
- Place a container under the pre-filter and drain it using drain plug 1 (fig. D4).
- Remove bleeder screw 2 (fig. D4) in order to ensure that the oil is drained properly.
- Unscrew locking screw 3 (fig. D4).
- Remove container 4 (fig. D4) and discard cartridge 5 (fig. D4) as well as its seals.
- Clean the inside of the filter head and the housing, using a brush immersed in clean diesel oil.
- Refit the assembly with a new cartridge and new seals (see: 3 - MAINTENANCE: FILTERS CARTRIDGES AND BELTS).
- If necessary, bleed the fuel circuit (see: 3 - MAINTENANCE: H1 - FUEL SYSTEM).

D5 - FUEL FILTER CARTRIDGE

CHANGE

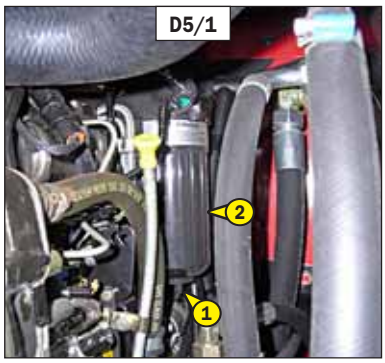

D5/1

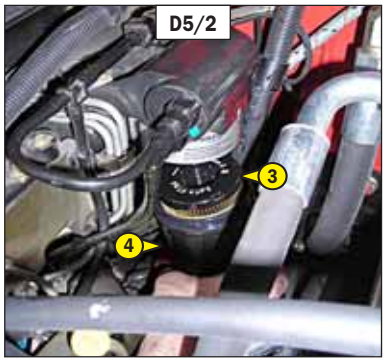

D5/2

Make sure the electrical contact on the lift truck is cut, otherwise fuel will be released if the lift pump is on.

- Open the I.C. engine bonnet.
- Carefully clean the outside of the filter and its holder, to prevent dust from getting into the system.
- Place a container under the filter and drain it through drain plug 1 (fig. D5/1).
- Loosen the body of filter 2 (fig. D5/1).
- Remove the filter cartridge by pressing cartridge 3 (fig. D5/2) down against the pressure of the spring and turn it to the left to extract it.
- Insert a new cartridge (see: 3 - MAINTENANCE: FILTERS AND BELTS), by pressing cartridge 3 (fig. D5/2) down against the pressure of the spring and turn it to the right to lock it into the body of the filter.
- Place the new seal 4 (fig. D5/2) onto the body of the filter and lightly lubricate the contact surface of the seal using clean motor oil.
- Remount the body of the filter onto its holder, hand-tighten it only and lock it with a quarter-turn.
- Close drain plug 1 (fig. D5/1).
- Before starting the I.C. engine, leave the ignition on for three minutes on the lift truck, to give the lift pump time to release air from the filter.
- Start up the I.C. engine and make sure there is no leakage.
- If necessary, bleed the fuel circuit (see: 3 - MAINTENANCE: H1 - FUEL SYSTEM).

D6 - HYDRAULIC RETURN OIL FILTER CARTRIDGE

CHANGE

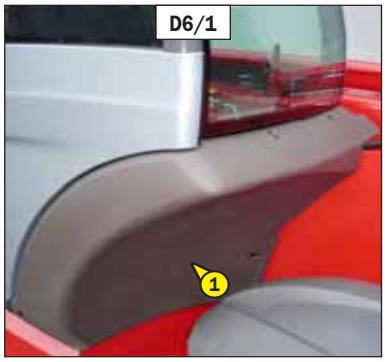

D6/1

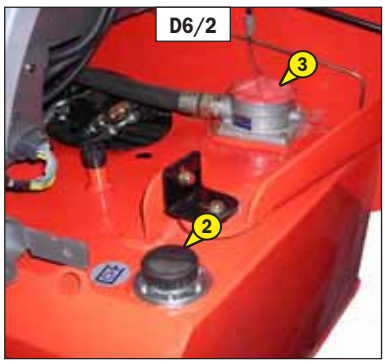

D6/2

Stop the I.C. engine and remove the pressure from the circuits by acting on the hydraulic controls.

Thoroughly clean the outside of the filter and its surroundings before any intervention in order to prevent any risk of polluting the hydraulic circuit.

- Remove protective casing 1 (fig. D6/1).
- Remove the filler plug 2 (fig. D6/2) and unscrew cover 3 (fig. D6/2) by two or three thread turns.
- Wait a few moments while the oil flows into the tank.
- Remove the cover and take out filter cartridge assembly 4 (fig. D6/3).
- Place the assembly in a clean container.
- Pinch the head 5 and separate it from the tank 6 (fig. D6/4).
- Replace the cartridge 7 (fig. D6/5) with a new one (see: 3 - MAINTENANCE: FILTERS CARTRIDGES AND BELTS).
- Put back the assembly then retighten the cover.
- Refit the filling cap.
- Refit the protective casing.

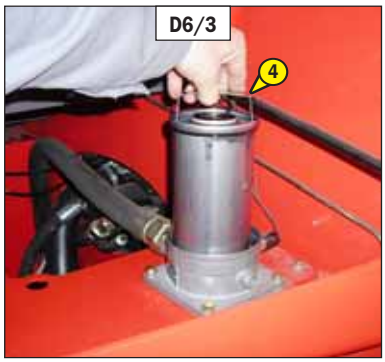

D6/3

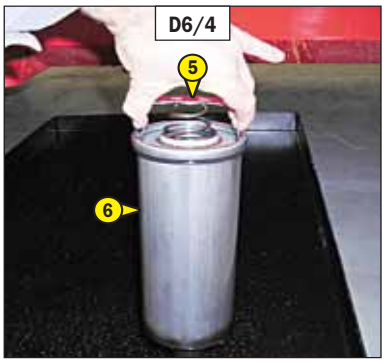

D6/4

D6/5

D7 - FRONT AND REAR AXLE DIFFERENTIAL OIL

DRAIN

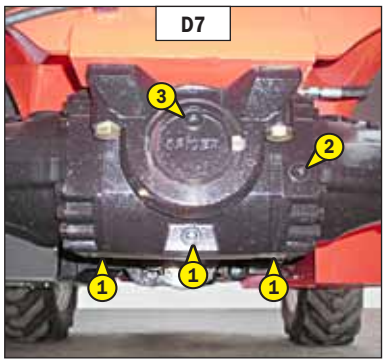

Place the lift truck on level ground with the I.C. engine stopped and the differential oil still warm.

Dispose of the drain oil in an ecological manner.

- Place a container under drain plugs 1 (fig. D7) and unscrew the plugs.
- Remove level plug 2 (fig. D7) and filler plug 3 (fig. D7) in order to ensure proper emptying.
- Refit and tighten drain plugs 1 (fig. D7) (tightening torque 34 to 49 N.m).
- Fill up with oil (see: 3 - MAINTENANCE: LUBRICANTS AND FUEL) through filler port 3 (fig. D7).
- The level is correct when the oil level is flush with the edge of port 2 (fig. D7).
- Check for any possible leaks at the drain plugs.
- Refit and tighten level cap 2 (fig. D7) (tightening torque 34 to 49 N.m) and filler plug 3 (fig. D7) (tightening torque 34 to 49 N.m).
- Repeat this operation for the rear axle differential.

E - EVERY 1000 HOURS SERVICE

Carry out the operations described previously as well as the following operations.

E1 - FUEL TANK

CLEAN

E2 - FUEL TANK BREATHER

CHANGE

While carrying out these operations, do not smoke or work near a flame.

Place the lift truck on level ground with the I.C. engine stopped.

- Inspect the parts susceptible to leaks in the fuel circuit and in the tank.
- In the event of a leak, contact your dealer.

Never try to carry out a weld or any other operation by yourself, this could provoke an explosion or a fire.

- Place a container under drain plug 1 (fig. E1/1) and unscrew the plug.
- Remove filling plug 2 (fig. E1/2) in order to ensure that the oil is drained properly.
- Rinse out with ten liters of clean diesel through filler port 3 (fig. E1/2).
- Refit and tighten the drain plug (tightening torque 29 to 39 N.m).
- Open the storage compartment 4 (fig. E1/3).
- Unscrew the breather 5 (fig. E1/4) and replace with a new one (see: 3 - MAINTENANCE: FILTERS CARTRIDGES AND BELTS) (tightening torque 5 ±2 N.m).
- Fill the fuel tank with clean diesel filtered through the filler port.
- Refit the filling cap.
- If necessary, bleed the fuel circuit (see: 3 - MAINTENANCE: H1 - FUEL SYSTEM).

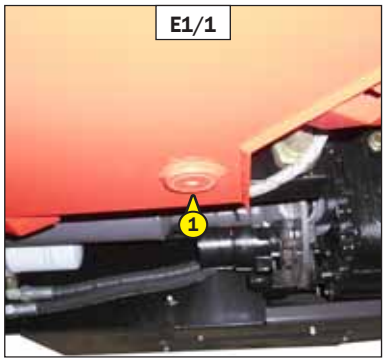

E1/1

E1/2

E1/3

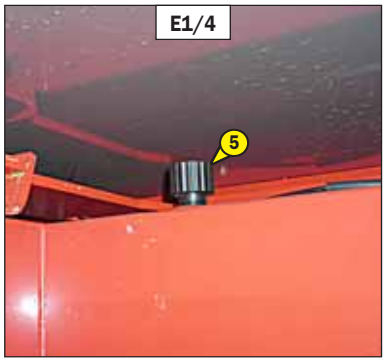

E1/4

E3 - SAFETY DRY AIR FILTER CARTRIDGE

CHANGE

- For the disassembly and reassembly of the dry air filter cartridge, see: 3 - MAINTENANCE: D3 - AIR FILTER CARTRIDGE.
- Gently remove the dry air filter safety cartridge 1 (fig. E3), taking care to avoid spilling the dust.
- Clean the gasket surface on the filter with a damp, clean lint-free cloth.
- Before mounting, check the state of the new safety cartridge (see: 3 - MAINTENANCE: FILTERS AND BELTS).
- Introduce the cartridge into the filter axis and push it in, pressing the edges and not the middle.

NOTE: The periodicity for changing the safety cartridge is given for information only. It must be changed for every two changes of the dry air filter cartridge.

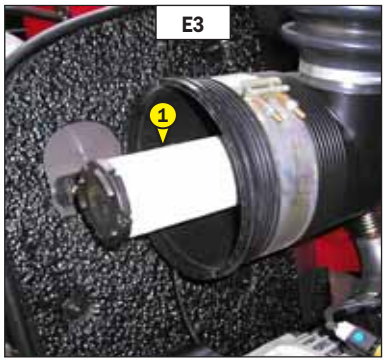

E3

E4 - GEAR BOX OIL

DRAIN

E5 - GEAR BOX OIL FILTER

CHANGE

Place the lift truck on level ground with the I.C. engine stopped, the gear box oil still warm.

DRAINING THE OIL
- Remove clutch housing cover 1(fig. E4/1).
- Place a container under drain plug 2 (fig. E4/2) and unscrew it.
- Remove dipstick 3 (fig. E4/3) in order to ensure proper emptying.

Dispose of the drain oil in an ecological manner.

REPLACEMENT OF THE FILTER
- Unscrew and discard gear box oil filter 4 (fig. E4/4) as well as its seal.
- Clean the filter bracket with a clean, lint-free cloth.
- Lightly grease the new seal before refitting the new oil filter (see: 3 - MAINTENANCE: FILTERS AND BELTS) on its bracket.

Tighten the oil filter by hand pressure only and lock the filter in place by a quarter turn.

FILLING UP THE OIL
- Refit and tighten drain plug 2 (fig. E4/2) (tightening torque 34 to 54 N.m).
- Fill up with oil (see: 3 - MAINTENANCE: LUBRICANTS AND FUEL) through filler port 5 (fig. E4/3) and refit dipstick 3 (fig. E4/3).
- Start the I.C. engine and let it run for a few minutes.
- Check for possible leaks from the drain plug and the oil filter.
- Stop the I.C. engine, and within 5 minutes of the engine being stopped, check on dipstick 3 (fig. E4/3) the correct level against the MAX. mark.
- Top up the level if necessary.
- Put back the cover plate 1 (fig. E4/1).

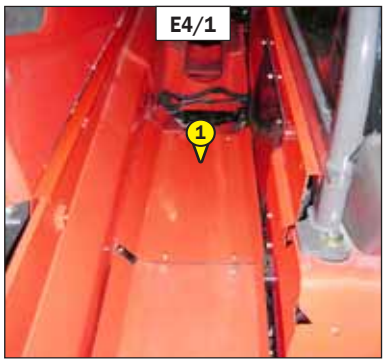

E4/1

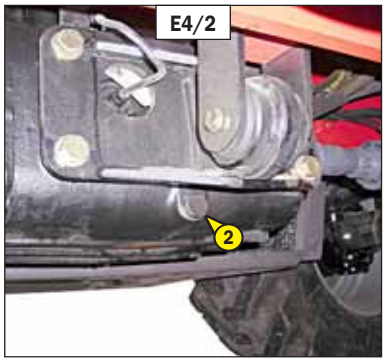

E4/2

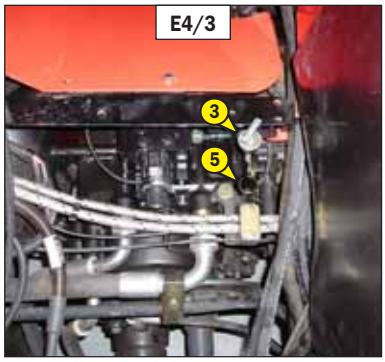

E4/3

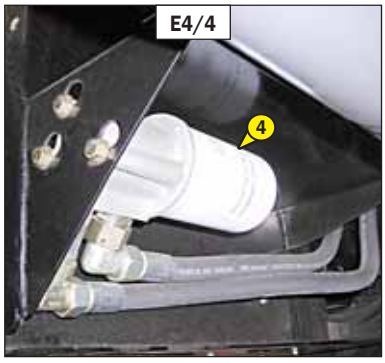

E4/4

E6 - JIB OUTER CHAIN WEAR

CHECK

MT 1840 A E3

Chain wear occurs at a number of locations.
- On the articulations, which leads to elongation of the chain.
- On the edge of link plates through contact with the pulleys.
- On the face of the plates and the extended pins through contact with the pulley flanges.
- On the alignment of the flats of the extended pins.

CHAIN ELONGATION

We recommend that you perform this operation using the chain checking gauge (fig. E6) (MANITOU part No.: 161583).
- Set the lift truck on its stabilizers, with the jib horizontal.
- Fully extend the telescopes and continue operating the control for a few moments to properly tension the chains.
- As the chain will likely wear unevenly over its length, divide the chain into 4 equal sections and check with the gauge at the centre of each section.

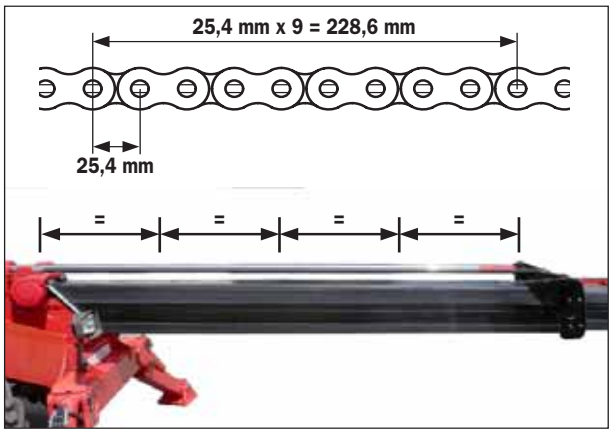

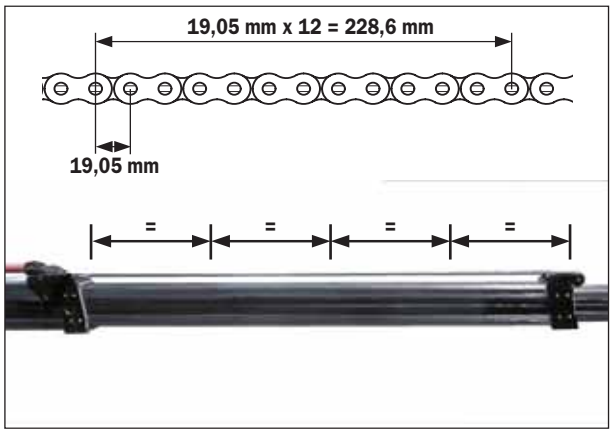

If the maximum dimension is exceeded (228.6 mm +2% = 233.2 mm), replace the pair of chains (contact your dealer).

SIDE WEAR OF PLATES

As for chain elongation, perform a check in the middle of each section using a calliper gauge.

If the dimension is less than the minimum dimension (24 mm - 2% = 23.5 mm and 15.5 mm -2% = 15.2 mm), replace the pair of chains (contact your dealer).

EXTENDED PIN WEAR

As for chain elongation, perform a check in the middle of each section using a calliper gauge.

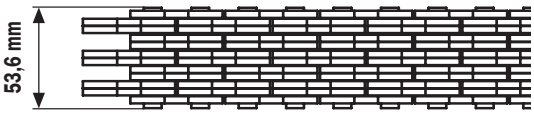

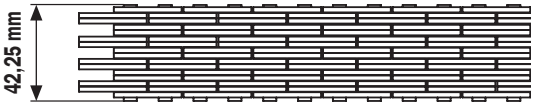

If the dimension is less than the minimum dimension (53.6 mm - 2% = 52.5 mm and 42.25 mm -2% = 41.4 mm), replace the pair of chains (contact your dealer).

- In addition to wear, the high pressures between the side of the plates and the pulleys may force out material, causing the articulations to seize. Replace the pair of chains in this case also.

ALIGNMENT OF EXTENDED PIN FLATS

Check the chains over their entire length.
- High friction between the plates and the extended pins may cause the pins to turn in the outer plates and thus come out of their housing.

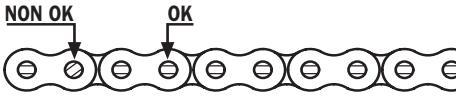

If the flats are not aligned in the longitudinal direction of the chain, replace the pair of chains (contact your dealer).

E7 - HYDRAULIC OIL
DRAIN

E8 - HYDRAULIC OIL TANK BREATHER
CHANGE

E9 - SUCTION STRAINER FOR HYDRAULIC OIL TANK
CLEAN

E10 - BRAKE ACCUMULATOR UNIT FILTER
CHANGE

E11 - DISTRIBUTOR CONTROL HEAD FILTER
CHANGE

E12 - REAR AXLE OSCILLATION BLOCKING FILTER
CHANGE

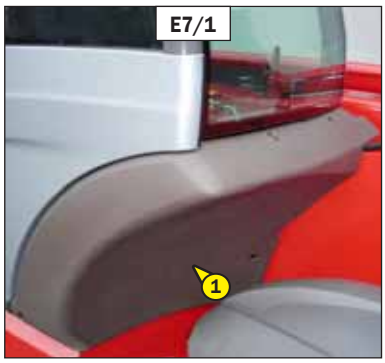

E7/1

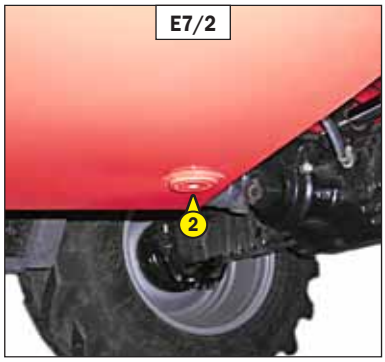

E7/2

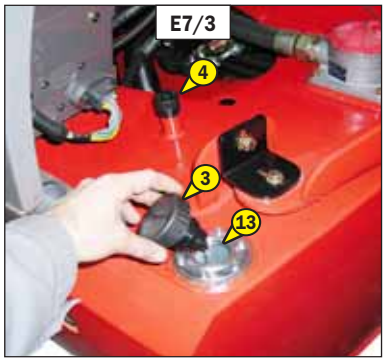

E7/3

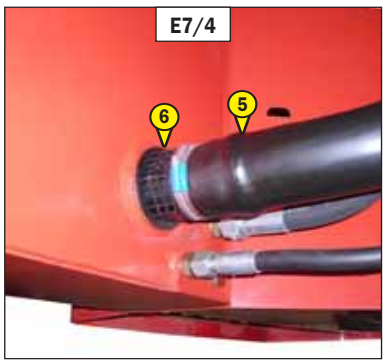

E7/4

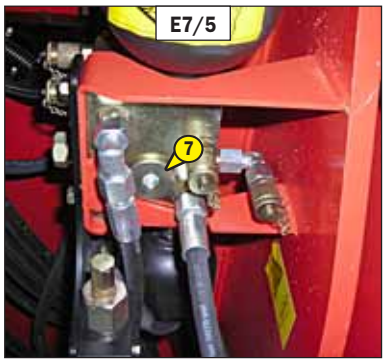

E7/5

Place the lift truck on level ground with the I.C. engine stopped and telescope jib retracted and lowered as far as possible.

Before any intervention, thoroughly clean the area surrounding the drain plug and the suction strainer on the hydraulic tank.

DRAINING THE OIL
- Remove protective casing 1 (fig. E7/1).
- Place a container under drain plug 2 (fig. E7/2) and unscrew the plug.
- Remove filling plug 3 (fig. E7/3) in order to ensure that the oil is drained properly.

Dispose of the drain oil in an ecological manner.

REPLACING THE BREATHER
- Unscrew the breather 4 (fig. E7/3) and replace with a new one (see: 3 - MAINTENANCE: FILTERS CARTRIDGES AND BELTS).

CLEANING THE STRAINER
- Disconnect hose 5 (fig. E7/4).
- Unscrew suction strainer 6 (fig. E7/4), clean it using a compressed air jet, check its condition and replace it, if necessary (see: 3 - MAINTENANCE: FILTERS AND BELTS).
- Refit the suction strainer making sure the seal is in the correct position.

REPLACING THE BRAKE ACCUMULATOR UNIT FILTER
- Unscrew plug 7 (fig. E7/5), remove the filter and replace with a new one.
- Refit and tighten plug 7 (fig. E7/5) (tightening torque 70 to 80 N.m).

REPLACING THE DISTRIBUTOR CONTROL HEAD FILTER
- Undo the two couplings 8 (fig.E7/6) and replace the filter 9 (fig. E7/6).

Be careful to mount the filter 9 (fig. E7/6) in the same direction as the arrow.

REPLACING THE REAR AXLE OSCILLATION BLOCKING FILTER
- Remove the half clamp 10 (fig. E7/7).
- Undo the two couplings 11 (fig.E7/7) and replace the filter 12 (fig. E7/7).

Be careful to mount the filter 12 (fig. D6/7) in the same direction as the arrow.

FILLING UP THE OIL
- Refit and tighten drain plug 2 (fig. E7/2) (tightening torque 29 to 39 N.m).
- Fill up with oil (see: 3 - MAINTENANCE: LUBRICANTS AND FUEL) by filler port 13 (fig. E7/3).

Use a clean container and funnel and clean the underside of the oil drum before filling.

- Observe the oil level on dipstick 14 (fig. E7/8), the oil level should be at the level of the red point.
- Check for any possible leaks at the drain plug.
- Refit the filler plug 3 (fig. E7/3).

HYDRAULIC CIRCUIT DECONTAMINATION
This should be carried out by your dealer after each oil change.
The hydraulic oil used in the circuit must be at least equal in quality to class 8 (according to NAS 1638). Your dealer will be able to clean the hydraulic circuit using an external unit and check the quality of the oil in order to ensure the long life of hydraulic components and particularly of the main pump.

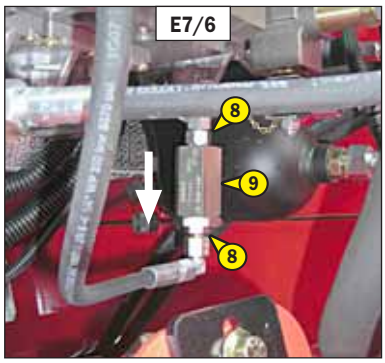

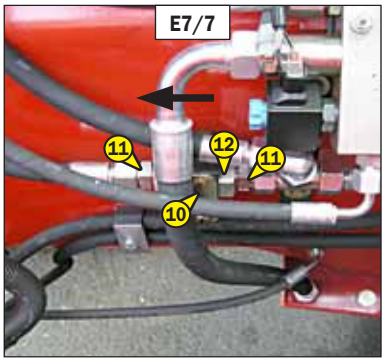

E13 - SEAT BELT

CHECK

SEAT BELT WITH TWO ANCHORING POINTS
- Check the following points:
  - Fixing of the anchoring points on the seat.
  - Cleanness of the strap and the locking mechanism.
  - Triggering of the locking mechanism.
  - Condition of the strap (cuts, curled edges).

REELED SEAT BELT WITH TWO ANCHORING POINTS
- Check the points listed above together with the following points:
  - The correct winding of the belt.
  - Condition of the reel guards.
  - Roller locking mechanism when the strap is given a sharp tug.

NOTE: After an accident, replace the seat belt.

In no event should the lift truck be used if the seat belt is defective (fixing, locking, cuts, tears, etc.). Repair or replace the seat belt immediately.

E14 - FRONT AND REAR WHEELS REDUCERS OIL

DRAIN

Place the lift truck on level ground with the I.C. engine stopped and the reducers oil still warm.

Dispose of the drain oil in an ecological manner.

- Drain and change the oil of each wheel reducer.
- Place drain plug 1 (fig. E14) in position A.
- Place a container under the drain plug and unscrew the plug.
- Let the oil drain fully.
- Place the drain port in position B, i.e. in a level port.
- Fill up with oil (see: 3 - MAINTENANCE: LUBRICANTS AND FUEL) by level port 1 (fig. E14).
- The level is correct when the oil level is flush with the edge of the hole.
- Refit and tighten the drain plug (tightening torque 34 to 49 N.m).

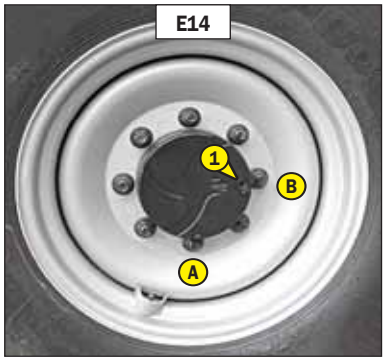

F - EVERY 2000 HOURS OF SERVICE

Carry out the operations described previously as well as the following operations.

F1 - COOLING LIQUID

DRAIN

These operations are to be carried out if necessary or every two years at the beginning of winter. Place the lift truck on level ground with the I.C. engine stopped and cold.

DRAINING THE LIQUID
- Open the I.C. engine bonnet.
- Remove the shroud 1 (fig. F1/1).
- Set a container under drain valve 2 (fig. F1/2) on the radiator and drain plug 3 (fig. F1/3) of the engine block and loosen them.
- Remove filler port 4 (fig. F1/4) from the expansion pan and open the heating control to the maximum in order to ensure proper emptying.
- Let the cooling circuit drain entirely while ensuring that the ports do not get clogged.
- Check the condition of the hoses as well as the fastening devices and change the hoses if necessary.
- Rinse the circuit with clean water and use a cleaning agent if necessary.

FILLING THE LIQUID
- Tighten the drain valve 2 (fig. F1/2) and drain plug 3 (fig. F1/3) (tightening torque 40 N.m).
- Slowly fill up the circuit with cooling liquid (see: 3 - MAINTENANCE: LUBRICANTS AND FUEL) up to the middle of the expansion pan 5 (fig. F1/4) through filler port 6 (fig. F1/4).
- Put back filling plug 4 (fig. F1/4).
- Run the I.C. engine at idle for a few minutes.
- Check for any possible leaks.
- Put back the shroud 1 (fig. F1/1).
- Check the level and refill if necessary.

The I.C. engine does not contain any corrosion resistor and must be filled during the whole year with a mixture containing 25 % of ethylene glycol-based antifreeze.

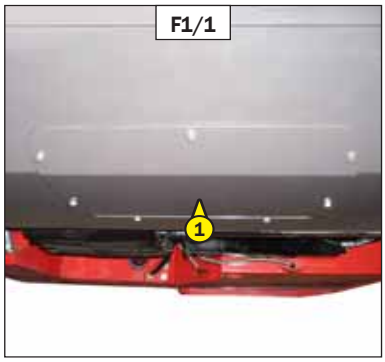

F1/1

F1/2

F1/3

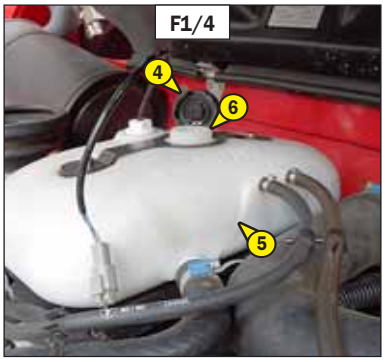

F1/4

F2 - AIR CONDITIONING (OPTION)

CLEANING CONDENSER AND EVAPORATOR COILS (*)
CLEANING CONDENSATE TRAY AND RELIEF VALVE (*)
COLLECTING COOLANT TO REPLACE FILTER-DRIER (*)
REFILLING WITH COOLANT AND CHECKING THE THERMOSTATIC CONTROL AND PRESSURE SWITCHES (*)

NOTE: When opening the evaporator unit, remember to replace the cover seal.

(*): (CONSULT YOUR DEALER).

CAUTION: DO NOT ATTEMPT TO REPAIR ANY PROBLEMS YOURSELF. ALWAYS REFER TO YOUR DEALER WHEN REFILLING CIRCUITS, AS THEY HOLD THE CORRECT SPARE PARTS, AS WELL AS HAVING THE NECESSARY TECHNICAL KNOWLEDGE AND TOOLS.

- Do not open the circuit under any circumstances as this would cause the coolant to be lost.
- The cooling circuit contains a gas which can be dangerous under certain conditions. This gas, coolant R 134a, is colourless, odourless and heavier than air.

• If this gas is inhaled, take the victim into fresh air, give oxygen or artificial respiration if necessary and call a doctor.
• If the gas is in contact with the skin, wash it immediately under running water and remove any contaminated garments.
• If the gas is in contact with the eyes, rinse them in clear water for 15 minutes and call a doctor.

- The compressor has an oil level gauge (fig. F2). Never unscrew this gauge because it would depressurizes the installation. The oil level is only checked when changing the oil in the circuit.

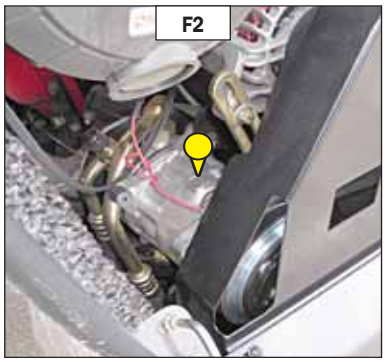

G - EVERY 4000 HOURS OF SERVICE

Carry out the operations described previously as well as the following operations.

G1 - JIB INNER CHAIN WEAR

CHECK

MT 1840 A E3

THE CHECKING OF THE JIB INNER CHAINS REQUIRES THE TELESCOPES TO BE DISASSEMBLED (CONTACT YOUR DEALER).

Chain wear occurs at a number of locations.
- On the articulations, which leads to elongation of the chain.
- On the edge of link plates through contact with the pulleys.
- On the face of the plates and the extended pins through contact with the pulley flanges.
- On the alignment of the flats of the extended pins.

CHAIN ELONGATION

We recommend that you perform this operation using the chain checking gauge (fig. G1) (MANITOU part No.: 161583).

- As the chain will likely wear unevenly over its length, divide the chain into 4 equal sections and check with the gauge at the centre of each section.

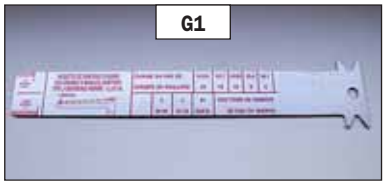

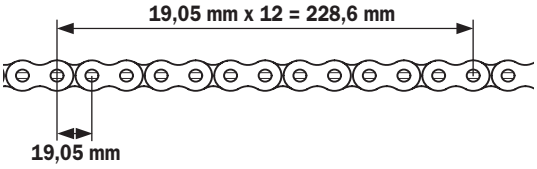

If the maximum dimension is exceeded (228.6 mm +2% = 233.2 mm), replace the pair of chains (contact your dealer).

SIDE WEAR OF PLATES

As for chain elongation, perform a check in the middle of each section using a calliper gauge.

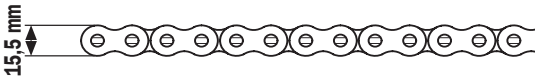

If the dimension is less than the minimum dimension (15.5 mm -2% = 15.2 mm), replace the chain or the pair of chains (contact your dealer).

EXTENDED PIN WEAR

As for chain elongation, perform a check in the middle of each section using a calliper gauge.

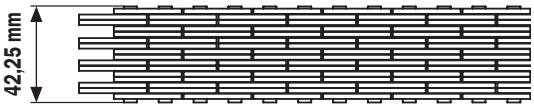

If the dimension is less than the minimum dimension (42.25 mm -2% = 41.4 mm), replace the chain or the pair of chains (contact your dealer).

- In addition to wear, the high pressures between the side of the plates and the pulleys may force out material, causing the articulations to seize. Replace the pair of chains in this case also.

ALIGNMENT OF EXTENDED PIN FLATS

Check the chains over their entire length.

- High friction between the plates and the extended pins may cause the pins to turn in the outer plates and thus come out of their housing.

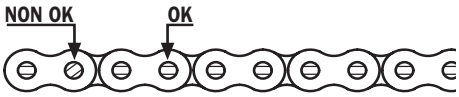

If the flats are not aligned in the longitudinal direction of the chain, replace the chain or the pair of chains (contact your dealer).

H - OCCASIONAL MAINTENANCE

H1 – FUEL SYSTEM

BLEED

These operations are to be carried out only in the following cases:

- A component of the fuel system replaced.
- A drained tank.
- Running out of fuel.

Ensure that the level of fuel in the tank is sufficient and bleed in the following order:

- Open the I.C. engine bonnet.
- Put the ignition on for three minutes on the lift truck, to give the lift pump time to release air from the filter.
- Switch off the ignition with the ignition key.

H1/1

BLEEDING THE INJECTORS

- Remove the injectors cover 1 (fig. H1/1).
- Loosen high pressure connectors 2 (fig. H1/2) of all the injectors.
- Activate the starter until the diesel fuel flows out free of air at high pressure connectors 2 (fig. H1/2).

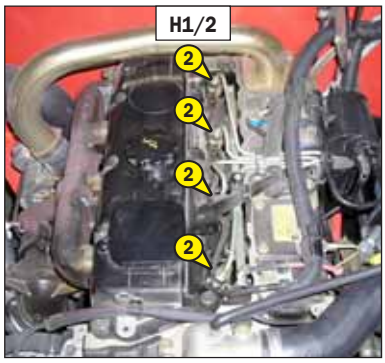

H1/2

Do not engage the starter motor on a continual basis for more than 30 seconds and let it cool between unsuccessful attempts.

- Tighten the connections while the diesel fuel is flowing out (tightening torque 30 N.m).

- So the I.C. engine is ready to be started up.
- Turn the I.C. engine over slowly for 5 minutes immediately after bleeding the fuel feed circuit, in order to ensure that the injection pump has been bled thoroughly.

NOTE: If the I.C. engine functions correctly for a short time then stops or functions irregularly, check for possible leaks in the low pressure circuit. If in doubt, contact your dealer.

H2 - WHEEL

CHANGE

In the event of a wheel being changed on the public highway, make sure of the following points:

For this operation, we advise you to use the hydraulic jack MANITOU reference 505507 and the safety support MANITOU reference 554772.

- Stop the lift truck, if possible on even and hard ground.
- To pass on stop of lift truck (see: 1 - OPERATING AND SAFETY INSTRUCTIONS: DRIVING INSTRUCTIONS UNLADEN AND LADEN).
- Put the warning lights on.
- Immobilise the lift truck in both directions on the axle opposite to the wheel to be changed.
- Unlock the nuts of the wheel to be changed.
- Place the jack under the flared axle tube, as near as possible to the wheel and adjust the jack (fig. H2/1).
- Lift the wheel until it comes off the ground and put in place the safety support under the axle (fig. H2/2).
- Completely unscrew the wheel nuts and remove them.
- Free the wheel by reciprocating movements and roll it to the side.
- Slip the new wheel on the wheel hub.
- Refit the nuts by hand, if necessary grease them.
- Remove the safety support and lower the lift truck with the jack.
- Tighten the wheel nuts with a torque wrench (see: 3 - MAINTENANCE: A - DAILY OR EVERY 10 HOURS SERVICE for tightening torque).

H2/1

H2/2

H3 - LONGITUDINAL STABILITY LIMITER AND WARNING DEVICE

RESET

According to the use of the lift truck, the device may require to be periodically reset.
This operation can be easily performed by means of the following procedure.
- Provide a fork carrier or a bucket and a load corresponding to at least half the lift truck's rated capacity.
- Preferably perform the reset when the lift truck is still cold (before it is used) or ensure that the temperature of the rear axle is not more than 50°C.
- Place the lift truck on flat, level ground with the wheels straight.
- Display the GAUGE "reset strain gauge" menu

(see: 2 - DESCRIPTION: 6D - SCREEN DISPLAY: MENU SCREEN) and validate .
- Enter the CUSTOMER code 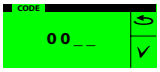

and validate .

Scrupulously follow the jib positioning instructions. The appearance of the 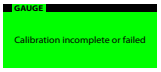

screen indicates a failure to obey an instruction, a cancellation request or a late response. If in doubt, consult your dealer.

STAGE 1	Fully extend the stabilizers. 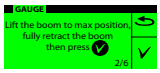 Completely raise the jib with the telescopes fully retracted.
STAGE 2	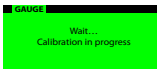 Calibration in progress...
STAGE 3	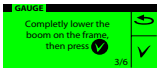 Fully lower the jib with the engine running at full revs and the hydraulic control at the maximum setting. Completely raise the stabilizers.
STAGE 4	With the fork carriage or the bucket and a load. Jib fully retracted in the lowered position, approximately 20 centimetres from the ground. 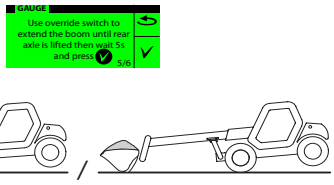 ***Keep the load as close to the ground as possible throughout this operation.*** - Hold down the disable the "aggravating" hydraulic movement cut-off button (indicator lamp lit), and telescope the jib until the rear wheels are off the ground. Wait 5 seconds and validate
FINISH	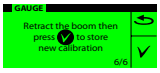 Retract the telescopes to restore the situation, and press the button to record the new parameters.

When the reset is completed, check the operation of the longitudinal stability limiter and warning device (see: 3 - MAINTENANCE: A - DAILY OF EVERY 10 HOURS SERVICE).

H4 - FRONT HEADLAMPS

ADJUST

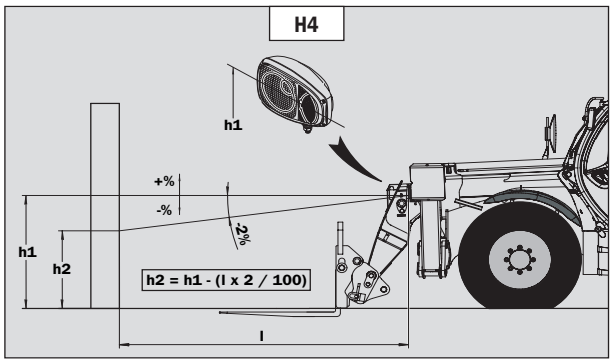

RECOMMENDED SETTING

(as per standard ECE-76/756 76/761 ECE20)

Set to - 2 % of the dipped beam in relation to the horizontal line of the headlamp.

ADJUSTING PROCEDURE

- Place the lift truck unloaded and in the transport position and perpendicular to a white wall on flat, level ground (fig. H4).
- Check the tire pressures (see: 2 - DESCRIPTION: FRONT AND REAR TIRES).
- Put the gearshift lever into neutral.

Calculating the height of the dipped beam (h2)

- h1 = Height of the dipped beam in relation to the ground.
- h2 = Height of the adjusted beam.
- l = Distance between the dipped beam and the white wall.

H5 - BREAKDOWN OF BATTERY

CHANGE

- Open the I.C. engine bonnet.
- Bring a floating battery of the same type as the one used for the lift truck and battery cables.
- Connect the floating battery while respecting the polarity (fig. H5/1).
- Start the lift truck and remove the cables as son as the I.C engine is running.
- Raise the jib.
- Lift out protective casing 1 (fig. H5/2).
- Replace battery 2 (fig. H5/3).

Handling and servicing a battery can be dangerous, take the following precautions:

- Wear protective goggles.
- Keep the battery horizontal.
- Never smoke or work near a naked flame.
- Work in a well-ventilated area.
- In the event of electrolyte being spilled onto the skin or splashed in the eyes, rinse thoroughly with cold water for 15 minutes and call a doctor.

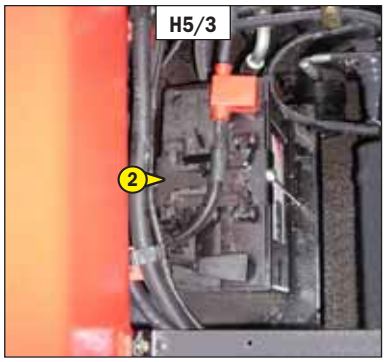

H6 - LIFT TRUCK

TOWING

Do not tow the lift truck at more than 6 km/h over a maximum distance of 5 km.

This manoeuvre is dangerous. Carefully chock the lift truck before towing, as the parking brake system is inoperative.

- Put the reversing lever in neutral and the gear shift into dead centre.
- Chock the lift truck.
- Remove the cap 1 (fig. H6/1).
- Loosen screw 2 (fig. H6/2) with a pin wrench 3 (fig. H6/3) to release the brake disk. Leave a minimum clearance of 5 mm between the disk 4 (fig. H6/4) and the brake pads 5 (fig. H6/4).
- Put the towing device into place.
- Remove the chocks.
- Switch on the warning lights.

NOTE: Since there will be no steering or braking assistance, operate these controls slowly. Avoid sudden jerky movements.

For adjusting the parking brake, please contact your dealer.

H6/1

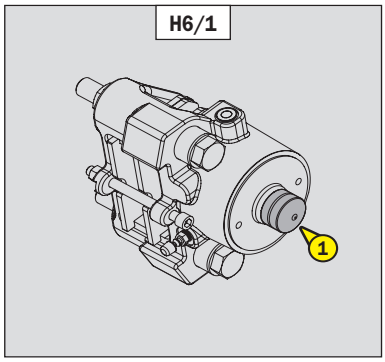

H6/2

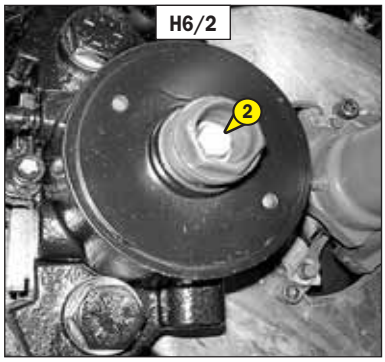

H6/3

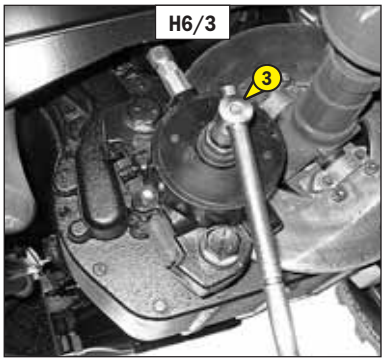

H6/4

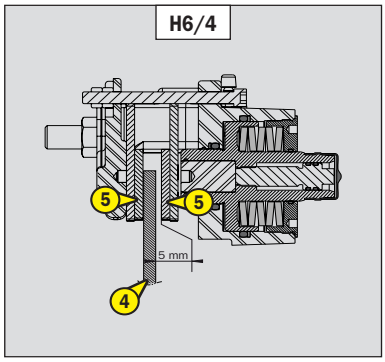

H7 - LIFT TRUCK

SLINGING

- Take into account the position of the lift truck centre of gravity for lifting (fig. H7/1).

WITH FLOATING FORK CARRIAGE

A = 1590 mm	B = 1480 mm	MT 1440 A E3
A = 1650 mm	B = 1420 mm	MT 1840 A E3

WITH EXTENSIBLE PLATFORM 2M25/4M 1000KG

A = 1270 mm	B = 1800 mm	MT 1440 A E3
A = 1350 mm	B = 1720 mm	MT 1840 A E3

- Place the hooks in the fastening points provided (fig. H7/2 and H7/3).

H7/1

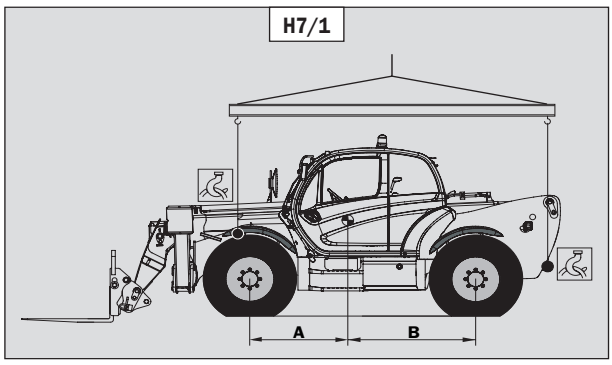

H7/2

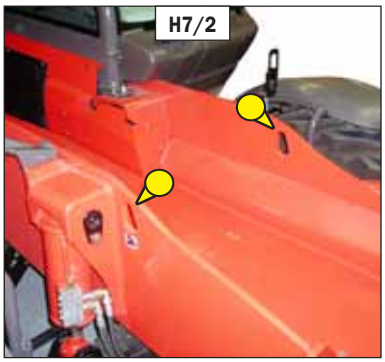

H7/3

H8 - LIFT TRUCK ON A PLATFORM

TRANSPORT

Ensure that the safety instructions connected to the platform are respected before the loading of the lift truck and that the driver of the means of transport is informed about the dimensions and the weight of the lift truck (see: 2 - DESCRIPTION: CHARACTERISTICS).

Ensure that the platform has got dimensions and a load capacity sufficient for transporting the lift truck. Check also the pressure on the contact surface allowable for the platform in connection with the lift truck.

For lift trucks equipped with a turbo-charged I.C. engine, block off the exhaust outlet to avoid rotation of the turbo shaft without lubrication when transporting the vehicle.

LOAD THE LIFT TRUCK

- Block the wheels of the platform.
- Fix the loading ramps so that you obtain an angle as little as possible to lift the lift truck.
- Load the lift truck parallel to the platform.
- Stop the lift truck (see: 1 - OPERATING AND SAFETY INSTRUCTIONS: DRIVING INSTRUCTIONS UNLADEN AND LADEN).

STOW THE LIFT TRUCK

- Fix the chocks to the platform at the front and at the back of each tyre (fig. H8/1).
- Fix also the chocks to the platform in the inside of each tyre (fig. H8/2).
- Secure the lift truck to the platform with sufficiently strong ropes. At the front of the lift truck, attach the ropes to the fastening points (fig. H8/3) and at the rear to the towing pin (fig. H8/4).
- Tighten the ropes (fig. H8/5).

H8/1

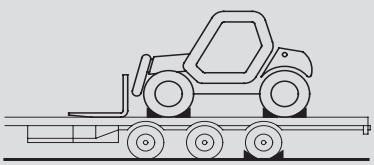

H8/2

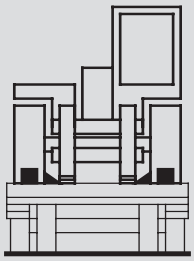

H8/3

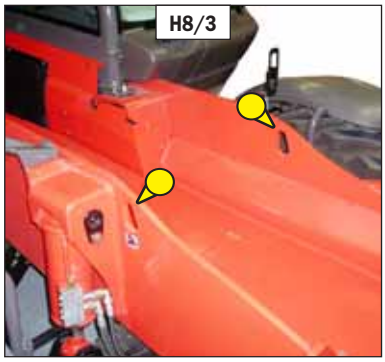

H8/4

H8/5

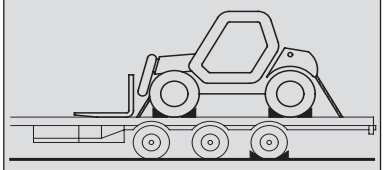

I - FAULT-FINDING ON THE RADIO-CONTROL (OPTION)

INTRODUCTION

FREQUENCIES AND ADDRESSING

The standard radio-controls are fitted with CS 434 synthesizer high frequency (HF) modules operating within the ISM band (professional industrial radio-controls). These HF modules meet European standard I-ETS 300-220 and can be legally used without a license fee. Each system comprises a transmission module and a receiving module that are factory-adjusted to a fixed frequency called the radio channel.

The unique address of each radio-control is stored in a plug-in module called ADMO. This module bears a label with the programmed number, that is also the radio-control's serial number. Only the manufacturer is authorised to program ADMO modules.

CS 434 FREQUENCY CHART (433.875 TO 434.650 MHZ)

GROUP A: 16 channels, A 1 to A16 in 0.05 MHz steps: A1 = 433.875, A2 = 433.925… A16 = 433.625

GROUP C: 16 channels, B 1 to B16 in 0.05 MHz steps: B1 = 433.900, B2 = 434.950… B16 = 433.650

Group A is selected using the solder bridge located under the HF module circuit:

- Bridge closed = group A
- Bridge open = group B

Should you experience radio-control radio communication problems, please contact your dealer (note all the details on the radio-control identification label before calling). Frequencies are exclusively allocated by the manufacturer. Failure to comply with this rule will invalidate the guarantee.

CS 434 HF SYNTHESIZER

Each standard radio-control is equipped with a CS 434 synthesizer HF channel. The synthesizer operates at a fixed frequency that is allocated by the manufacture when it leaves the factory. It must not be changed by the user.

SEMI-AUTOMATIC OR AUTOMATIC HF SYNTHESIZER

The radio-control system can OPTIONALLY be equipped with semi-automatic or automatic synthesizers:

- Semi-automatic: The system automatically changes radio channel each time it is deactivated and reactivated.
- Automatic: The system selects a free channel each time it is activated.

RADIO-CONTROL FAULT FINDING CHART

IF YOU ARE UNSUCCESSFUL, CONTACT YOUR NEAREST DEALER (note all the details on the radio-control identification label before calling).

FAULT	POSSIBLE CAUSE	REMEDY
• Transmitter will not initialise.	- Missing handling plug. - Incomplete/incorrect self-test. - Empty battery.	- Connect the handling plug. - After approximately 3 seconds, hold down the initialisation button for 2 seconds to initialise the link. - Change the battery.
• Transmitter controls do not respond.	- Receiver is not powered. - Unmatched transmitter and receiver. - Faulty battery.	- Lift truck main switch not engaged. - Receiver plug not connected. - Check the units' serial numbers and HF channels on the labels. - Check battery connections (corrosion/cleanliness/etc.).
• Short battery life.	- Wrong, faulty or incorrectly charged battery.	- Check that the correct battery has been connected, that it is properly charged, that the battery power source and connections are reliable.
• Lift truck control signal transmission disrupted.	- Radio-control with the same frequency in use in the vicinity. - No radio link. - Major obstacle between the transmitter and receiver. - Out of range.	- Are there other radio-controlled machines in the vicinity? (crane, concrete pump, etc.). - Check whether the green lamp of the transmitter is flashing. - Move closer to the lift truck. - Move closer to the lift truck.
• Isolated functions do not work.	- Interruption of the lift truck receiver link.	- Check the lift truck receiver link, the plug and the harness.

4 - OPTIONAL ATTACHMENTS FOR USE WITH THE RANGE

TABLE OF CONTENTS

INTRODUCTION 4-5

PICKING UP THE ATTACHMENTS 4-6

TECHNICAL SPECIFICATIONS OF ATTACHMENTS 4-8

ATTACHMENT SHIELDS 4-14

INTRODUCTION

- Your lift truck must be used with interchangeable equipment. These items are called: ATTACHMENTS.

- A wide range of attachments is available, guaranteed by MANITOU and designed to fit your lift truck perfectly.

Only attachments approved by MANITOU are to be used on our lift trucks (see: 4 - ADAPTABLE ATTACHMENTS IN OPTION ON THE RANGE: TECHNICAL SPECIFICATIONS OF ATTACHMENTS). The manufacturer shall not be liable for any modification or adaptation of an attachment made without its knowledge.

- The attachments are delivered with a load chart concerning your lift truck. The operator's manual and the load chart should be kept in the places provided in the lift truck. For standard attachments, their use is governed by the instructions contained on this notice.

Maximum loads are defined by the capacity of a lift truck taking account of the attachment's mass and centre of gravity. In the event of the attachment having less capacity than the lift truck, never exceed this limit.

- Some particular uses require the adaptation of the attachment which is not provided in the price-listed options. Optional solutions exist, consult your dealer.

Depending on their size, certain attachments may, when the jib is lowered and retracted, come into contact with the front tyres and cause damage to them, if reverse tilt is activated in the forward tilt direction. TO PREVENT THIS RISK, EXTEND THE TELESCOPE TO A SUFFICIENT EXTENT FOR THE PARTICULAR LIFT TRUCK AND ATTACHMENT SO THAT THIS CONTACT IS NOT POSSIBLE.

SUSPENDED LOAD

Suspended loads MUST be handled with a lift truck designed for that purpose (see: 1 - OPERATING AND SAFETY INSTRUCTIONS: LOAD HANDLING INSTRUCTIONS: H - TAKING-UP AND SETTING-DOWN A SUSPENDED LOAD).

USE WITH SINGLE SIDE-SHIFT CARRIAGE

The single side-shift carriage (TSDL) is only compatible with the following attachments:

- ***floating fork carriage (TFF)***
- ***tilting fork carriage (PFB)***
- ***loading bucket (CBR)***
- ***concrete bucket (BB, BBG)***
- ***chute bucket (GL)***
- ***crane jib and crane jib with winch (P, PT, PO, PC)***
- ***winch (H)***
- ***fixed platform, swivelling platform, roofer's platform.***

The use of any other attachment on the TSDL is forbidden.
The attachments permitted on the TSDL must be used in strict compliance with their intended applications.
Their use for any other application (e.g., earth moving, excavation, desurfacing, back scraping, etc. for the loading bucket CBR) or any application placing abnormal stress on the structure of the TSDL is forbidden: risk of deformation which could cause the load to fall.

USE OF BUCKETS

MT 1440/1840 A E3 lift trucks are essentially intended for handling. Occasional use with the buckets CBC/CBR/CB4x1 is authorized (only with the jib fully retracted, in order to reduce stresses on the jib head), but under no circumstances is intensive use for difficult applications (quarry, waste, cereals, agriculture, etc) permitted. Back-scraping is also forbidden with the MT 1840 A E3 lift truck to avoid additional stresses on the inner jib chains.

PICKING UP THE ATTACHMENTS

A - ATTACHMENT WITHOUT HYDRAULICS AND HAND LOCKING DEVICE

TAKING UP AN ATTACHMENT

- Ensure that the attachment is in a position facilitating the locking to the carriage. If it is not correctly oriented, take the necessary precautions in order to move it safely.
- Check that the locking pin and the clip are in position in the bracket (fig. A).
- Place the lift truck with the jib fully lowered in front of and parallel to the attachment, tilt the carriage forwards (fig. B).
- Bring the carriage under the locking tube of the attachment, slightly lift the jib, incline the carriage backwards in order to position the attachment (fig. C).
- Lift the attachment off the ground to facilitate locking.

HAND LOCKING

- Take the locking pin and the clip on the bracket (fig. A) and lock the attachment (fig. D). Do not forget to refit the clip.

HAND RELEASING

- Proceed in the reverse order of paragraph HAND LOCKING while making sure you put back the locking pin and the clip in the bracket (fig. A).

LAYING AN ATTACHMENT

- Proceed in the reverse order of paragraph TAKING UP AN ATTACHMENT while making sure you place the attachment flat on the ground and in closed position.

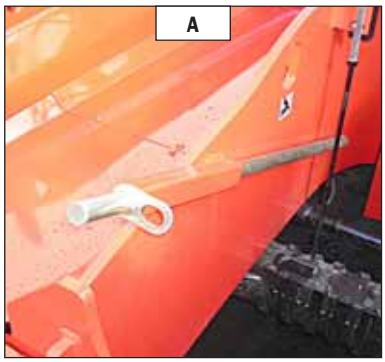

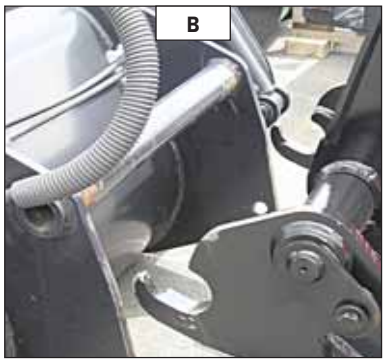

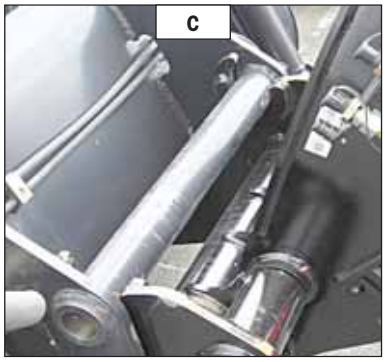

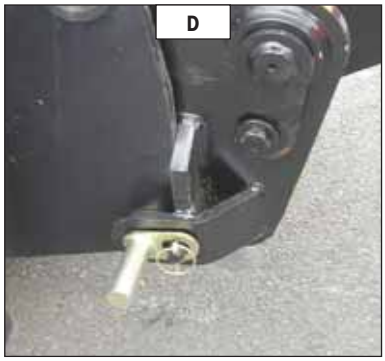

B - HYDRAULIC ATTACHMENT AND MANUAL LOCKING DEVICE

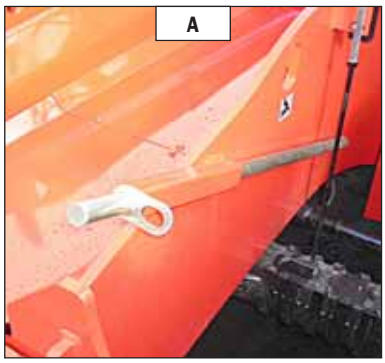

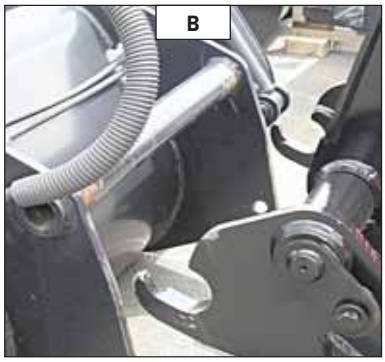

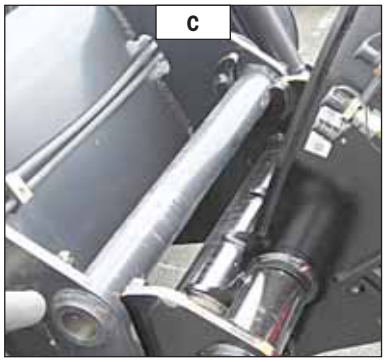

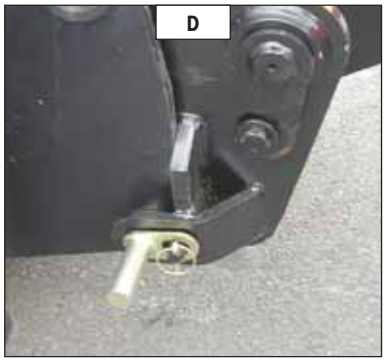

TAKING UP AN ATTACHMENT

- Ensure that the attachment is in a position facilitating the locking to the carriage. If it is not correctly oriented, take the necessary precautions in order to move it safely.
- Check that the locking pin and the clip are in position in the bracket (fig. A).
- Place the lift truck with the jib fully lowered in front of and parallel to the attachment, tilt the carriage forwards (fig. B).
- Bring the carriage under the locking tube of the attachment, slightly lift the jib, incline the carriage backwards in order to position the attachment (fig. C).
- Lift the attachment off the ground to facilitate locking.

MANUAL LOCKING AND CONNECTION OF THE ATTACHMENT

- Take the locking pin and the clip on the bracket (fig. A) and lock the attachment (fig. D). Do not forget to refit the pin.
- Stop the I.C. engine and keep the ignition on the lift truck.
- Press for two seconds on the push-button to release the attachment circuit hydraulic pressure. Screens 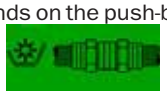 and will be alternately displayed.
- Connect the rapid connectors according to the logic of the attachment's hydraulic movements.

Make sure that the rapid connectors are clean and protect the holes which are not used, with the caps provided.

HAND RELEASING AND DISCONNECTING THE ATTACHMENT

- Proceed in the reverse order of paragraph HAND LOCKING AND CONNECTING THE ATTACHMENT while making sure you put back the locking pin and the clip in the bracket (fig. A).

REMOVING THE ATTACHMENT

- Proceed in the reverse order of paragraph TAKING UP AN ATTACHMENT while making sure you place the attachment flat on the ground and in closed position.

TECHNICAL SPECIFICATIONS OF ATTACHMENTS

FLOATING FORK CARRIAGE			
	TFF 45 MT-1040	TFF 45 MT-1300	
PART NUMBER	**653344**	**653345**	
Rated capacity	4500 kg	4500 kg	
Width	1040 mm	1300 mm	
Weight	370 kg	400 kg	

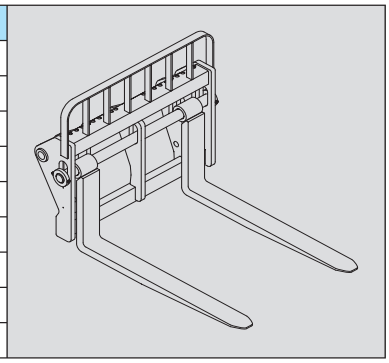

FLOATING FORK SIDE-SHIFT CARRIAGE			
Use is prohibited with the optional single side-shift carriage (TSDL).			
	TFF 45 MT-1040 DL	TFF 45 MT-1300 DL	
PART NUMBER	**751545**	**751546**	
Rated capacity	4500 kg	4500 kg	
Side-shift	2x100 mm	2x100 mm	
Width	1040 mm	1300 mm	
Weight	410 kg	450 kg	

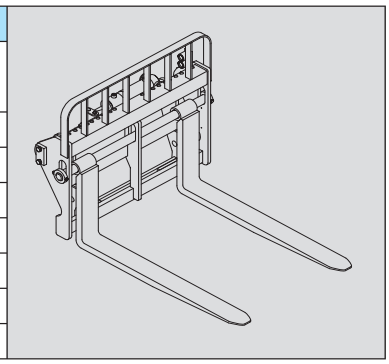

FLOATING FORK			
PART NUMBER	**211922**		
Section	125x50x1200 mm		
Weight	71 kg		

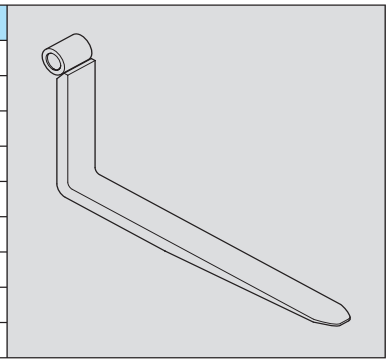

STANDARDISED TILTING FORK CARRIAGE			
	PFB 45 N MT-1260 S2	PFB 45 N MT-1670 S2	PFB 45 N MT-2000 S2
PART NUMBER	**654407**	**653747**	**653748**
Rated capacity	4500 kg	4500 kg	4500 kg
Width	1260 mm	1670 mm	2000 mm
Weight	200 kg	255 kg	288 kg

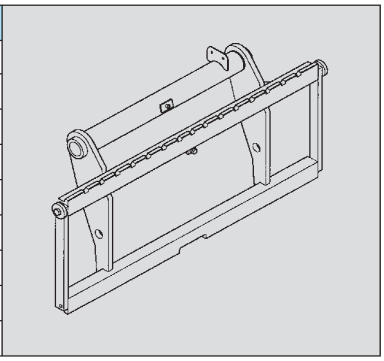

STANDARDISED SIDE-SHIFT CARRIAGE			
Use is prohibited with the optional single side-shift carriage (TSDL).			
MT 1440 A E3			
	TDLA 40 N MT-1670		
PART NUMBER	**751542**		
Rated capacity	4300 kg		
Side-shift	2x100 mm		
Width	1670 mm		
Weight	265 kg		

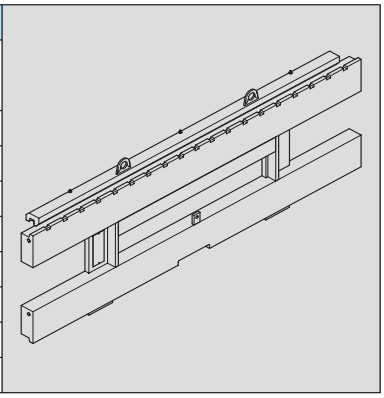

STANDARDISED FORK			
PART NUMBER	**415652**		
Section	125x50x1200 mm		
Weight	78 kg		

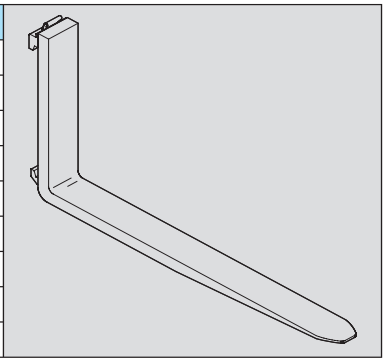

LOAD BACK REST			
PART NUMBER	**727035**	**572788**	**572790**
Width	1260 mm	1670 mm	2000 mm
Weight	46 kg	56 kg	63 kg

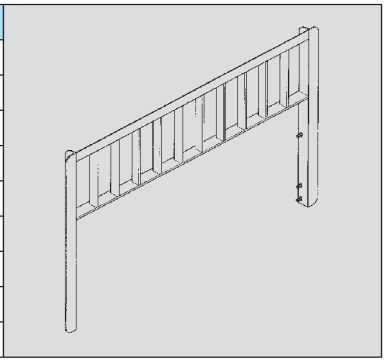

BUILDING BUCKET

Use is prohibited with the optional single side-shift carriage (TSDL).

MT 1440 A E3

	CBC 700 L1950 S2	CBC 800 L2250 S3	CBC 900 L2450 S3
PART NUMBER	**654472**	**654471**	**654470**
Rated capacity	697 l	814 l	893 l
Width	1950 mm	2250 mm	2450 mm
Weight	330 kg	385 kg	410 kg

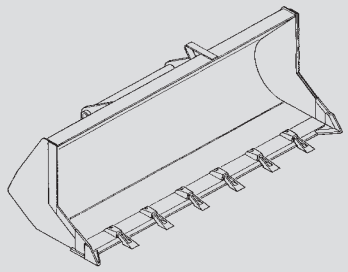

LOADING BUCKET

	CBR 900 L2250 S2	CBR 1000 L2450 S2	
PART NUMBER	**653749**	**654716**	
Rated capacity	904 l	990 l	
Width	2250 mm	2450 mm	
Weight	390 kg	410 kg	

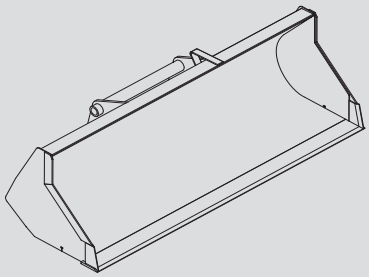

BUCKET 4X1

Use is prohibited with the optional single side-shift carriage (TSDL).

MT 1440 A E3

	CB4x1-700 L1950	CB4x1-850 L2300	CB4x1-900 L2450
PART NUMBER	**751402**	**751401**	**751465**
Rated capacity	700 l	850 l	900 l
Width	1950 mm	2300 mm	2450 mm
Weight	640 kg	735 kg	765 kg

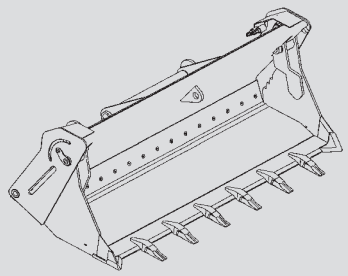

GRAB BUCKET

Use is prohibited with the optional single side-shift carriage (TSDL).

MT 1440 A E3

	CBG 1950 S4	CBG 2300 S4	CBG 2450 S4
PART NUMBER	**751407**	**751414**	**751418**
Rated capacity	1 m3	1,2 m3	1,26 m3
Width	1950 mm	2300 mm	2450 mm
Grab	7	8	8
Weight	555 kg	615 kg	635 kg

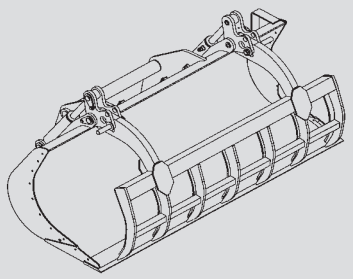

GRAB BUCKET (NON-HAZARDOUS INDUSTRIAL WASTE)

Use is prohibited with the optional single side-shift carriage (TSDL).

MT 1440 A E3

	CBG 1950 DIB S4	CBG 2300 DIB S4	CBG 2450 DIB S4
PART NUMBER	**653016**	**653018**	**653020**
Rated capacity	1 m3	1,2 m3	1,26 m3
Width	1950 mm	2300 mm	2450 mm
Grab	7	8	8
Weight	678 kg	740 kg	767 kg

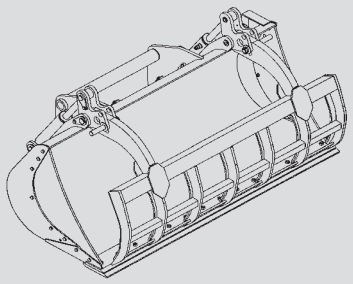

GRAB BUCKET (GRAB CLOSED)

Use is prohibited with the optional single side-shift carriage (TSDL).

MT 1440 A E3

	CBG 2300 GF S4		
PART NUMBER	**653008**		
Rated capacity	1,2 m3		
Width	2300 mm		
Grab	8		
Weight	637 kg		

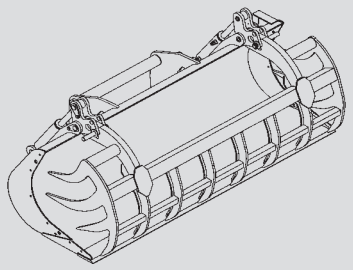

GRAB BUCKET (CLOSED JAWS AND REVERSIBLE REMOVABLE BLADE)

Use is prohibited with the optional single side-shift carriage (TSDL).

MT 1440 A E3

	CBG 1950 JFD-LDR S4	CBG 2300 JFD-LDR S4	CBG 2450 JFD-LDR S4
PART NUMBER	**653003**	**653006**	**653009**
Rated capacity	1 m3	1,2 m3	1,26 m3
Width	1950 mm	2300 mm	2450 mm
Grab	7	8	8
Weight	655 kg	715 kg	742 kg

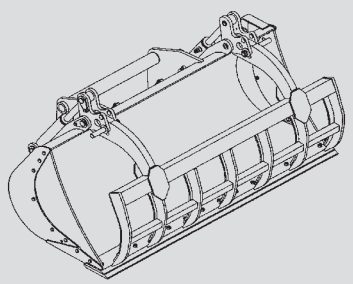

CONCRETE BUCKET (ADAPTABLE ON FORKS)			
	BB 500 S4	BBH 500 S4	
PART NUMBER	**654409**	**751462**	
Rated capacity	500 l/1300 kg	500 l/1300 kg	
Width	1100 mm	1100 mm	
Weight	205 kg	220 kg	

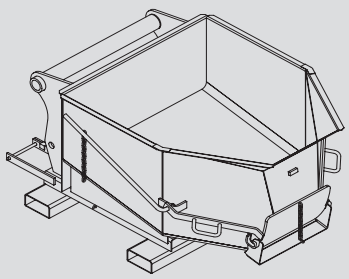

CONCRETE BUCKET WITH SPOUT (ADAPTABLE ON FORKS)			
	BBG 500 S4	BBHG 500 S4	
PART NUMBER	**654411**	**751464**	
Rated capacity	500 l/1300 kg	500 l/1300 kg	
Width	1100 mm	1100 mm	
Weight	220 kg	235 kg	

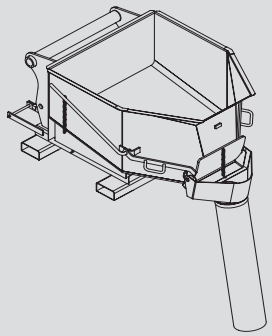

SPOUT BUCKET (ADAPTABLE ON FORKS)			
	GL 300 S2	GL 400 S2	
PART NUMBER	**174371**	**174372**	
Rated capacity	300 l/725 kg	400 l/969 kg	
Weight	150 kg	166 kg	
HYDRAULIC KIT TO OPEN THE SPOUT			
PART NUMBER	**653750**		

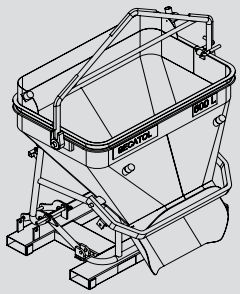

SPOUT BUCKET (ADAPTABLE ON FORKS)			
	GL 600 S2	GL 800 S2	
PART NUMBER	**174373**	**174374**	
Rated capacity	600 l/1440 kg	800 l/1920 kg	
Weight	290 kg	325 kg	
HYDRAULIC KIT TO OPEN THE SPOUT			
PART NUMBER	**653750**		

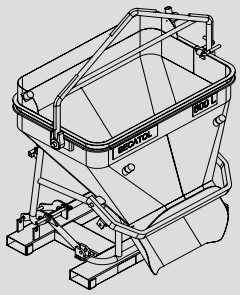

SPOUT BUCKET (ADAPTABLE ON FORKS)			
	GL 1000 S2	GL 1500 S2	
PART NUMBER	**174375**	**174376**	
Rated capacity	1000 l/2440 kg	1500 l/3591 kg	
Weight	360 kg	409 kg	
HYDRAULIC KIT TO OPEN THE SPOUT			
PART NUMBER	**653750**		

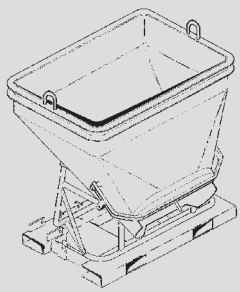

CRANE JIB			
	P 600 MT S3		
PART NUMBER	**653228**		
Rated capacity	600 kg		
Weight	170 kg		

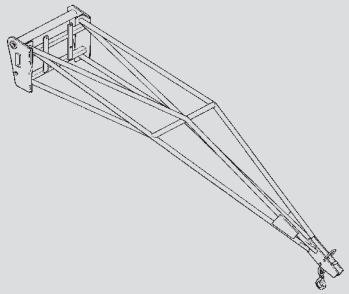

CRANE JIB			
	P 4000 MT S2		
PART NUMBER	**653226**		
Rated capacity	4000 kg/1200 kg		
Weight	210 kg		

CRANE JIB WITH WINCH			
	PT 600 MT S6		
PART NUMBER	**708538**		
Rated capacity	600 kg		
Weight	288 kg		

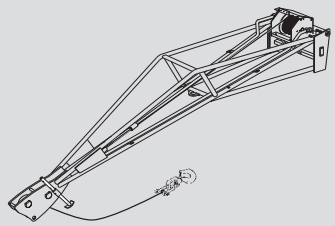

15°/15° MULTI-DIRECTIONAL CRANE JIB			
	P0 600 L2500 S2	P0 1000 L1500 S2	P0 2000 L1000 S2
PART NUMBER	**751547**	**751548**	**751549**
Rated capacity	600 kg	1000 kg	2000 kg
Weight	320 kg	275 kg	255 kg

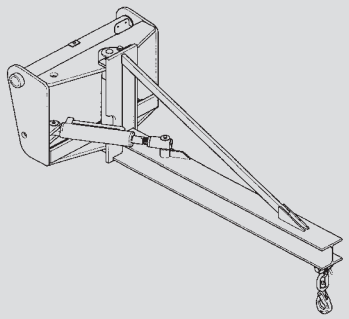

WINCH			
	H4T S4		
PART NUMBER	**708535**		
Rated capacity	4000 kg		
Weight	420 kg		

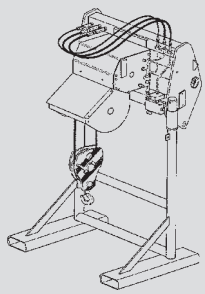

ATTACHMENT SHIELDS

FORK PROTECTOR			
PART NUMBER	**227801**		

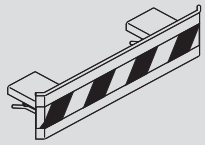

FORK BLOCK FOR FLOATING FORK CARRIAGE			
PART NUMBER	**261210**		

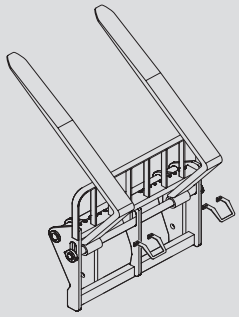

BUCKET PROTECTOR			
NOTE: Always ensure that the width of the protector you choose is less than or equal to the width of the bucket.			
PART NUMBER	**206734**	**206732**	**206730**
Width	1375 mm	1500 mm	1650 mm
PART NUMBER	**235854**	**206728**	**206726**
Width	1850 mm	1950 mm	2000 mm
PART NUMBER	**223771**	**223773**	**206724**
Width	2050 mm	2100 mm	2150 mm
PART NUMBER	**206099**	**206722**	**223775**
Width	2250 mm	2450 mm	2500 mm

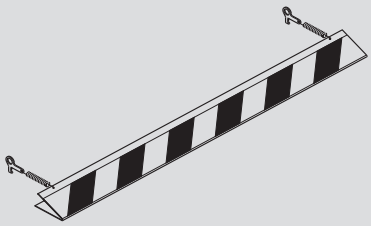

5 - ADAPTABLE PLATFORMS IN OPTION ON THE RANGE

TABLE OF CONTENTS

INTRODUCTION 5-3

PLATFORM TECHNICAL SPECIFICATIONS 5-4

INTRODUCTION

- A wide range of platforms, specially designed and perfectly suitable for your lift truck is available and guaranteed by MANITOU.

Only platforms approved by Manitou can be used with their lift trucks (see: 5 - OPTIONAL PLATFORMS FOR USE WITH THE RANGE: TECHNICAL SPECIFICATIONS OF PLATFORMS). The manufacturer shall not be liable for any modifications or adaptations made to platforms without its knowledge.

- The platforms are delivered with a load chart concerning your lift truck. The operator's manual and the load chart should be kept in the places provided in the lift truck. Their use is governed by the instructions contained on this notice.

- Some particular uses require the adaptation of the attachment which is not provided in the price-listed options. Optional solutions exist, consult your dealer.

PLATFORM TECHNICAL SPECIFICATIONS

FIXED PLATFORM 2M	
PART NUMBER	**788782**
Rated capacity	365 kg including 3 persons
A	2000 mm
C	1210 mm
D	1292 mm
Weight	410 kg

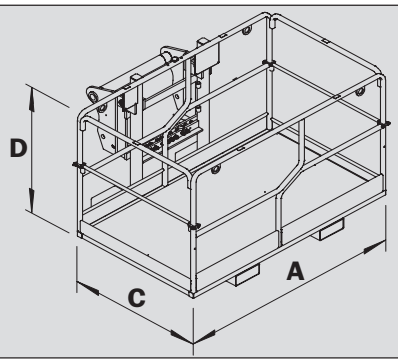

MT 1440 A E3

WITH SINGLE CARRIAGE

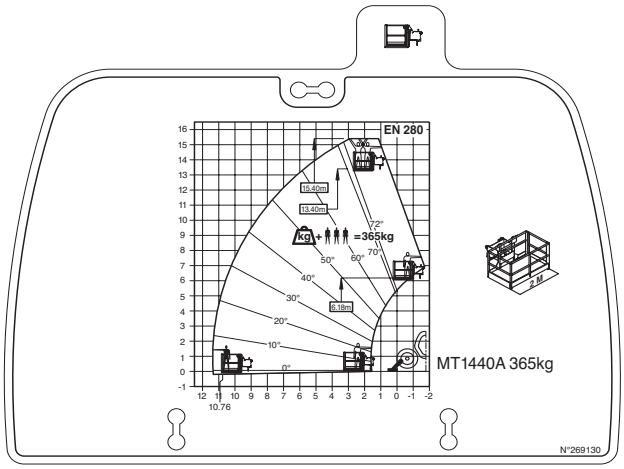

MT 1440 A E3

WITH SINGLE SIDE-SHIFT CARRIAGE

MT 1840 A E3

WITH SINGLE CARRIAGE

MT 1840 A E3

WITH SINGLE SIDE-SHIFT CARRIAGE

EXTENSIBLE AND SWIVELLING PLATFORM 2M25/4M00	
PART NUMBER	**788783**
Rated capacity	365 kg including 3 persons
A	2250 mm
B	4000 mm
C	1210 mm
D	1320 mm
E	980 mm
F	90 °
Weight	700 kg

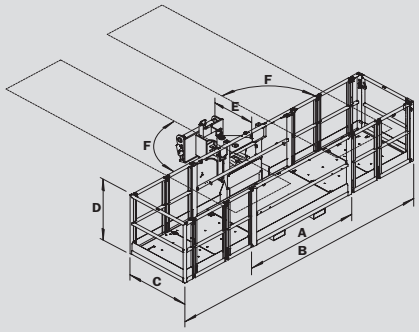

MT 1440 A E3

WITH SINGLE CARRIAGE

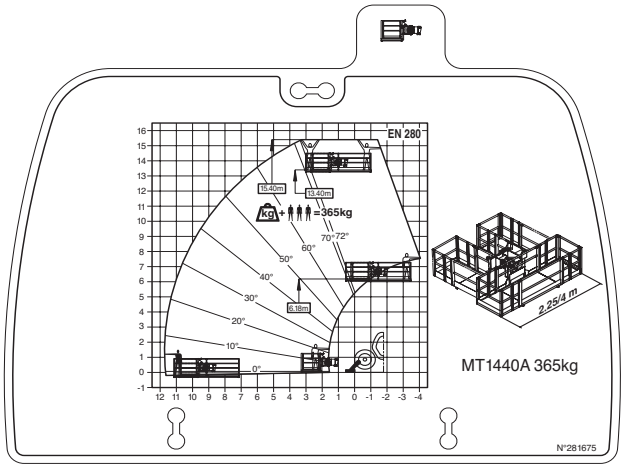

MT 1440 A E3

WITH SINGLE SIDE-SHIFT CARRIAGE

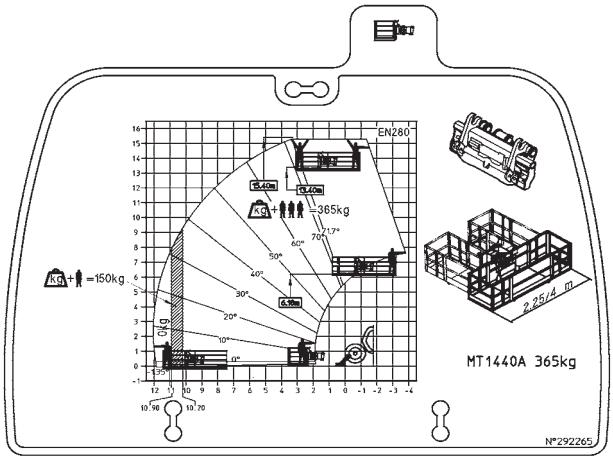

MT 1840 A E3

WITH SINGLE CARRIAGE

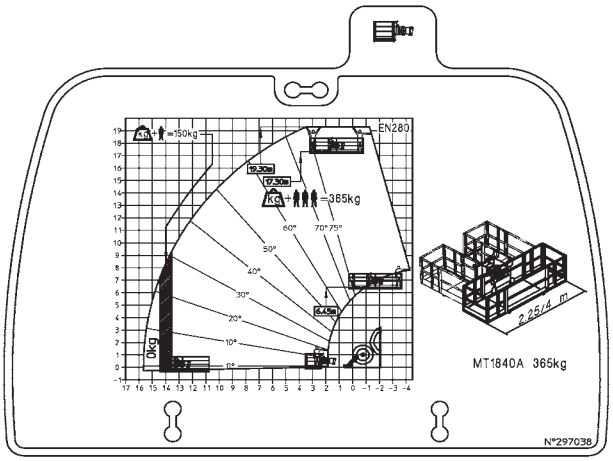

MT 1840 A E3

WITH SINGLE SIDE-SHIFT CARRIAGE

EXTENSIBLE AND SWIVELLING PLATFORM 2M45/6M00	
PART NUMBER	**788784**
Rated capacity	365 kg including 3 persons
A	2450 mm
B	6000 mm
C	1200 mm
D	1300 mm
E	887 mm
F	90 °
Weight	1210 kg

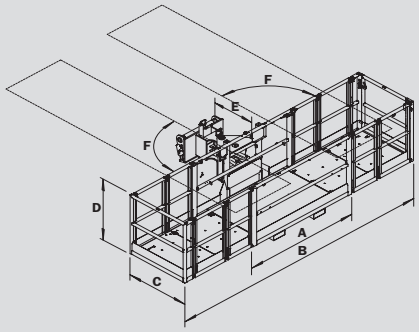

MT 1440 A E3

WITH SINGLE CARRIAGE

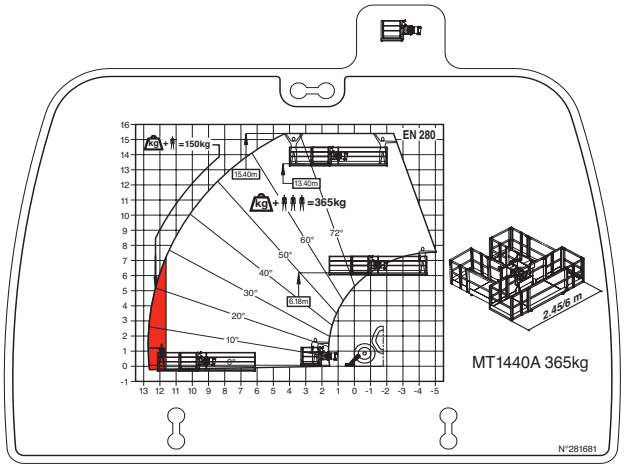

MT 1440 A E3

WITH SINGLE SIDE-SHIFT CARRIAGE

MT 1840 A E3

WITH SINGLE CARRIAGE

MT 1840 A E3

WITH SINGLE SIDE-SHIFT CARRIAGE

EXTENSIBLE AND SWIVELLING PLATFORM 2M25/4M00 1000KG	
PART NUMBER	**788785**
Rated capacity	1000 kg including 3 persons
A	2250 mm
B	4000 mm
C	1200 mm
D	1300 mm
E	887 mm
F	90 °
Weight	1030 kg

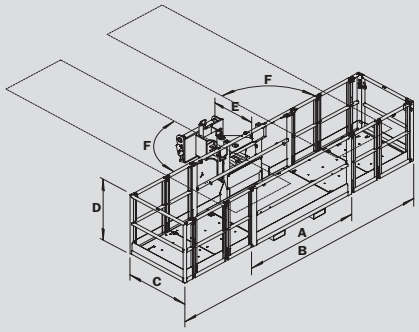

MT 1440 A E3

WITH SINGLE CARRIAGE

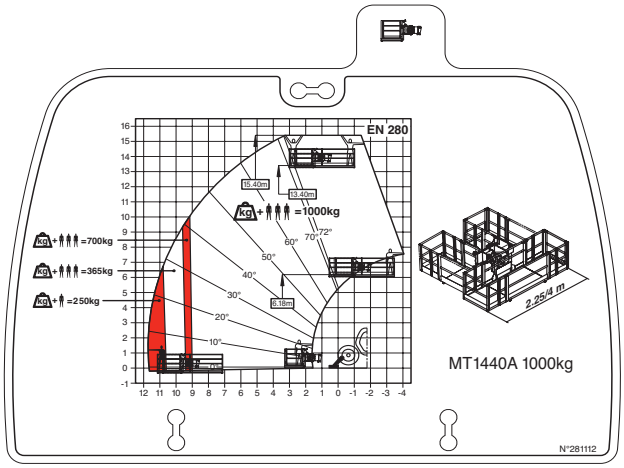

MT 1440 A E3

WITH SINGLE SIDE-SHIFT CARRIAGE

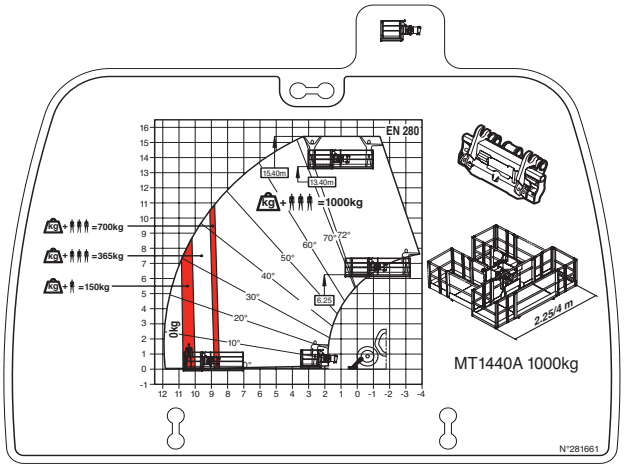

MT 1840 A E3

WITH SINGLE CARRIAGE

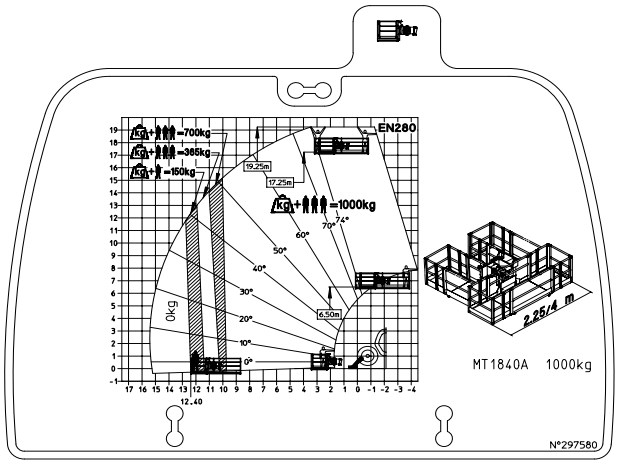

MT 1840 A E3

WITH SINGLE SIDE-SHIFT CARRIAGE

EXTENSIBLE AND SWIVELLING PLATFORM 2M45/5M00 1000KG	
PART NUMBER	**788786**
Rated capacity	1000 kg including 3 persons
A	2450 mm
B	5000 mm
C	1200 mm
D	1300 mm
E	887 mm
F	90 °
Weight	1150 kg

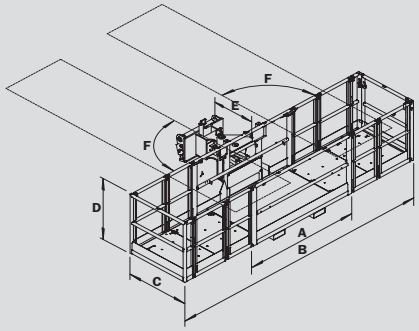

MT 1440 A E3

WITH SINGLE CARRIAGE

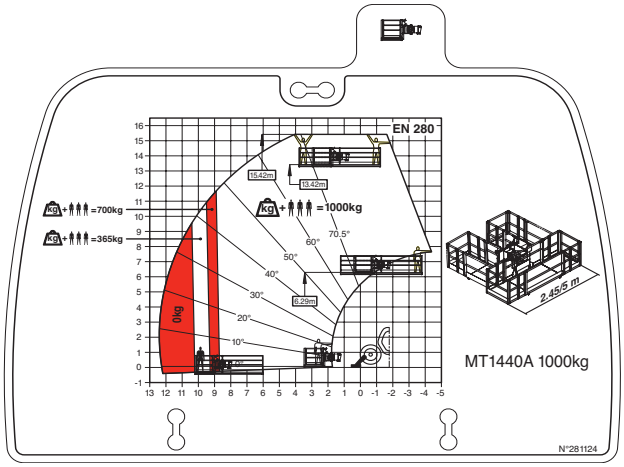

MT 1440 A E3

WITH SINGLE SIDE-SHIFT CARRIAGE

MT 1840 A E3

WITH SINGLE CARRIAGE

MT 1840 A E3

WITH SINGLE SIDE-SHIFT CARRIAGE

ROOFER'S PLATFORM NC 365KG	
PART NUMBER	**788789**
Rated capacity	365 kg including 3 persons
A	2420 mm
C	1305 mm
D	1600 mm
E	1200 mm
F	90 °
Weight	1745 kg (1110 + 635 kg)
Platform only	1110 kg
Swilvelling system	635 kg

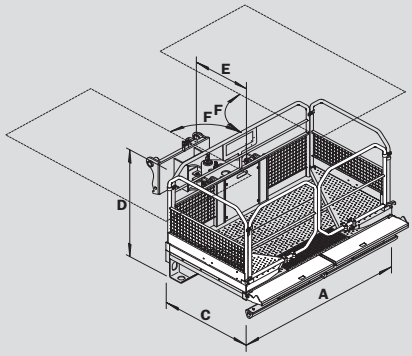

MT 1440 A E3

WITH SINGLE CARRIAGE

MT 1440 A E3

WITH SINGLE SIDE-SHIFT CARRIAGE

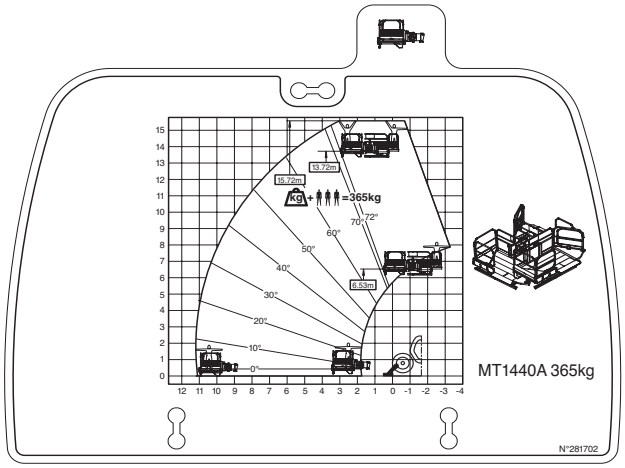

MT 1840 A E3

WITH SINGLE CARRIAGE

MT 1840 A E3

WITH SINGLE SIDE-SHIFT CARRIAGE

ROOFER'S PLATFORM NC 1000KG	
PART NUMBER	**788791**
Rated capacity	1000 kg including 3 persons
A	2420 mm
C	1305 mm
D	1600 mm
E	887 mm
F	90 °
Weight	1655 kg (1020 + 635 kg)
Platform only	1020 kg
Swilvelling system	635 kg

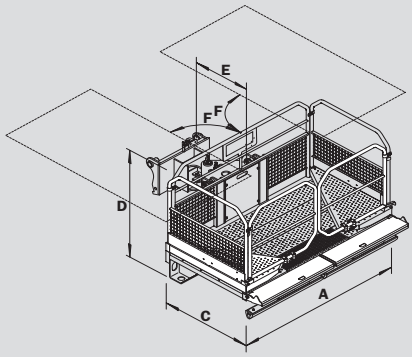

MT 1440 A E3

WITH SINGLE CARRIAGE

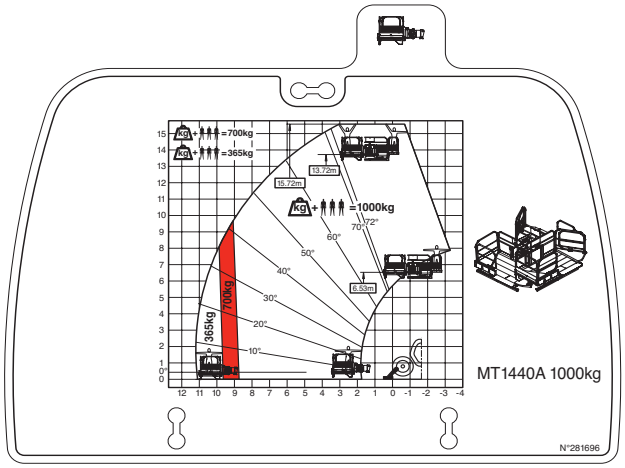

MT 1840 A E3

WITH SINGLE CARRIAGE